Colour Television

Chassis

LC4.7E

AA

Service
Service
Service

E_14710_000.eps
240604

For PDP see: Supplement service manual for SDI plasma panels, 312278514940

Service Manual

Contents **Page**

1. Technical Specifications, Connections, and Chassis Overview 2
2. Safety Instructions, Warnings, and Notes 4
3. Directions for Use 5
4. Mechanical Instructions 6
5. Service Modes, Error Codes, and Faultfinding 9
6. *Block Diagrams, Testpoint Overviews, and Waveforms*
   - Wiring Diagram 15
   - Block Diagram Audio and Video 16
   - Block Diagram Audio and Video 17
   - Testpoint Overview SSB (Top Side) 18
   - I2C IC Overview 19
   - Supply Voltage Overview 20
7. *Circuit Diagrams and PWB Layouts* *Diagram* *PWB*
   - SSB: Tuner and VIF (Diagram A1) 21 38-47
   - SSB: Histogram and Hercules (Diagram A2) 22 38-47
   - SSB: Histogram and Hercules (Diagram A3) 23 38-47
   - SSB: Audio Delay line (LIPSYNC)(Diagr. A4) 24 38-47
   - SSB: Audio Amplifier (Diagram A5) 25 38-47
   - SSB: TV-Supply (Diagram A6) 26 38-47
   - SSB: Scaler (Diagram A7) 27 38-47
   - SSB: Scaler Supply (Diagram A8) 28 38-47
   - SSB: Scaler Interface (Diagram A9) 29 38-47
   - SSB: SDRAM (Diagram A10) 30 38-47
   - SSB: Flash / Control (Diagram A11) 31 38-47
   - SSB: HDMI (Reserved) (Diagram A12) 32 38-47
   - SSB: PCHD-MUX (Diagram A13) 33 38-47
   - SSB: Supply (Diagram A14) 34 38-47
   - SSB: DC-DC Converter (Diagram A15) 35 38-47
   - SSB: PCHD IO (Diagram A16) 36 38-47
   - SSB: Rear IO Scart (Diagram A17) 37 38-47
   - PDP Audio Panel (Diagram C) 48 49
   - Side IO Panel (Diagram D) 50 51
   - Top Control Panel (Diagram E) 52 53
   - EMC Filter Panel (Diagram EMC) 54 55
   - LED and Switch Panel (Diagram J) 56 57
8. Alignments 59
9. Circuit Descriptions 63
   - Abbreviation List 68
   - IC Data Sheets 70
10. Spare Parts List 73
11. Revision List 79

©Copyright 2004 Philips Consumer Electronics B.V. Eindhoven, The Netherlands. All rights reserved. No part of this publication may be reproduced, stored in a retrieval system or transmitted, in any form or by any means, electronic, mechanical, photocopying, or otherwise without the prior permission of Philips.

Published by WO 0469 Service PaCE Printed in the Netherlands Subject to modification EN 3122 785 14721

PHILIPS

1. Technical Specifications, Connections, and Chassis Overview

Index of this chapter:
1. Technical Specifications
2. Connection Overview
3. Chassis Overview

Note: Figures below can deviate slightly from the actual situation, due to the different set executions.

1.1 Technical Specifications

1.1.1 Vision

Display type	:	LCD-IPS
Screen size	:	37” (94 cm), 16:9
	:	42” (106 cm), 16:9
Resolution (HxV pixels)	:	852x480
Contrast ratio	:	3000:1
Light output (cd/m^2)	:	1000
Viewing angle (HxV degrees)	:	160x160
Tuning system	:	PLL
TV Colour systems	:	PAL B/G, D/K, I
	:	SECAM B/G, D/K, L/L’
Video playback	:	NTSC M/N 4.43
	:	PAL B/G
	:	SECAM L/L’
Supported inputs	:	VGA (640x350)
	:	VGA (640x480)
	:	VGA (720x400)
	:	MAC (640x480)
	:	MAC (832x624)
	:	SVGA (800x600)
	:	XVGA (1024x768)
	:	WXGA (1280x768)
	:	PAL 576i 1fH CVI
	:	NTSC 480i 1fH CVI
	:	PAL 576p 2fH HD
	:	NTSC 480p 2fH HD
	:	ATSC 720p 2fH HDMI
	:	ATSC 1080i 2fH HDMI
Channel selections	:	100 presets
	:	UVSH
Aerial input	:	75 ohm, Coax
	:	IEC-type

1.1.2 Sound

Sound systems	:	FM-mono
	:	AM-mono
	:	FM-stereo B/G
	:	NICAM B/G, D/K, I, L
Maximum power (W_{RMS})	:	2 x 15

1.1.3 Miscellaneous

Power supply:		
- Mains voltage (V_{AC})	:	90 - 264
- Mains frequency (Hz)	:	50
Ambient conditions:		
- Temperature range (deg. C)	:	+5 to +40
- Maximum humidity	:	90% R.H.

1.2 Connection Overview

Note: The following connector colour abbreviations are used (acc. to DIN/IEC 757): Bk= Black, Bu= Blue, Gn= Green, Gy= Grey, Rd= Red, Wh= White, and Ye= Yellow.

1.2.1 Rear Connections

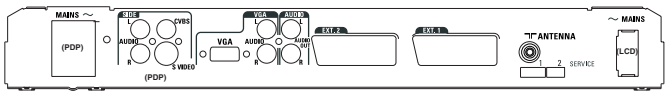

Figure 1-1 Rear I/O

Cinch: Video CVBS - In, Audio - In

Wh - Audio L	0.5 V_{RMS} / 10kohm	
Rd - Audio R	0.5 V_{RMS} / 10kohm	
Ye - Video CVBS	1 V_{PP} / 75 ohm	

SVHS (Hosiden): Video Y/C - In

1 - Ground Y	Gnd	
2 - Ground C	Gnd	
3 - Video Y	1 V_{PP} / 75 ohm	
4 - Video C	0.3 V_{PP} / 75 ohm	

VGA: Video RGB - In

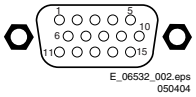

Figure 1-2 VGA Connector

1 - Video Red	0.7 V_{PP} / 75 ohm	
2 - Video Green	0.7 V_{PP} / 75 ohm	
3 - Video Blue	0.7 V_{PP} / 75 ohm	
4 - n.c.		
5 - Ground	Gnd	
6 - Ground Red	Gnd	
7 - Ground Green	Gnd	
8 - Ground Blue	Gnd	
9 - +5V_DC	+5 VDC	
10 - Ground Sync	Gnd	
11 - n.c.		
12 - DDC_SDA	DDC data	
13 - H-sync	0 - 5 V	
14 - V-sync	0 - 5 V	
15 - DDC_SCL	DDC clock	

Cinch: VGA (PC) Audio - In

Rd - Audio - R	0.5 V_{RMS} / 10 kohm	
Wh - Audio - L	0.5 V_{RMS} / 10 kohm	

Cinch: Audio - Out

Rd - Audio - R	0.5 V_{RMS} / 10 kohm	
Wh - Audio - L	0.5 V_{RMS} / 10 kohm	

External 2: Video CVBS/YC - In/Out, Audio - In/Out

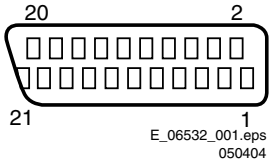

Figure 1-3 SCART connector

1	- Audio R	0.5 V_{RMS} / 1 kohm	
2	- Audio R	0.5 V_{RMS} / 10 kohm	
3	- Audio L	0.5 V_{RMS} / 1 kohm	
4	- Ground Audio	Gnd	
5	- Ground Blue	Gnd	
6	- Audio L	0.5 V_{RMS} / 10 kohm	
7	- Video C	0.7 V_{PP} / 75 ohm	
8	- Function Select	0 - 2 V: INT	
		4.5 - 7 V: EXT 16:9	
		9.5 - 12 V: EXT 4:3	
9	- Ground Green	Gnd	
10	- Easylink P50	0 - 5 V / 4.7 kohm	
11	- n.c.		
12	- n.c.		
13	- Ground Red	Gnd	
14	- Ground FBL	Gnd	
15	- Video C	0.7 V_{PP} / 75 ohm	
16	- n.c.		
17	- Ground Video	Gnd	
18	- n.c.		
19	- Video CVBS	1 V_{PP} / 75 ohm	
20	- Video Y/CVBS	1 V_{PP} / 75 ohm	
21	- Shield	Gnd	

External 1: Video RGB/YUV-In, CVBS-In/Out, Audio-In/Out

1	- Audio R	0.5 V_{RMS} / 1 kohm	
2	- Audio R	0.5 V_{RMS} / 10 kohm	
3	- Audio L	0.5 V_{RMS} / 1 kohm	
4	- Ground Audio	Gnd	
5	- Ground Blue	Gnd	
6	- Audio L	0.5 V_{RMS} / 10 kohm	
7	- Video Blue/U	0.7 V_{PP} / 75 ohm	
8	- Function Select	0 - 2 V: INT	
		4.5 - 7 V: EXT 16:9	
		9.5 - 12 V: EXT 4:3	
9	- Ground Green	Gnd	
10	- n.c.		
11	- Video Green/Y	0.7 or 1 V_{PP} / 75 ohm	
12	- n.c.		
13	- Ground Red	Gnd	
14	- n.c.		
15	- Video Red/V	0.7 V_{PP} / 75 ohm	
16	- RGB Ctrl	0 - 0.4 V: INT	
		1 - 3 V: EXT / 75 ohm	
17	- Ground Video	Gnd	
18	- Ground RGB Ctrl	Gnd	
19	- Video CVBS	1 V_{PP} / 75 ohm	
20	- Video CVBS	1 V_{PP} / 75 ohm	
21	- Shield	Gnd	

Aerial - In

-	- IEC-type (EU)	Coax, 75 ohm	

Service connector 1 (UART)

1	- UART_TX	Transmit data	
2	- Ground	Gnd	
3	- UART_RX	Receive data	

Service connector 2 (ComPair)

1	- SDA-S	I^2C Data (0 - 5 V)	
2	- SCL-S	I^2C Clock (0 - 5 V)	
3	- Ground	Gnd	

1.3 Chassis Overview

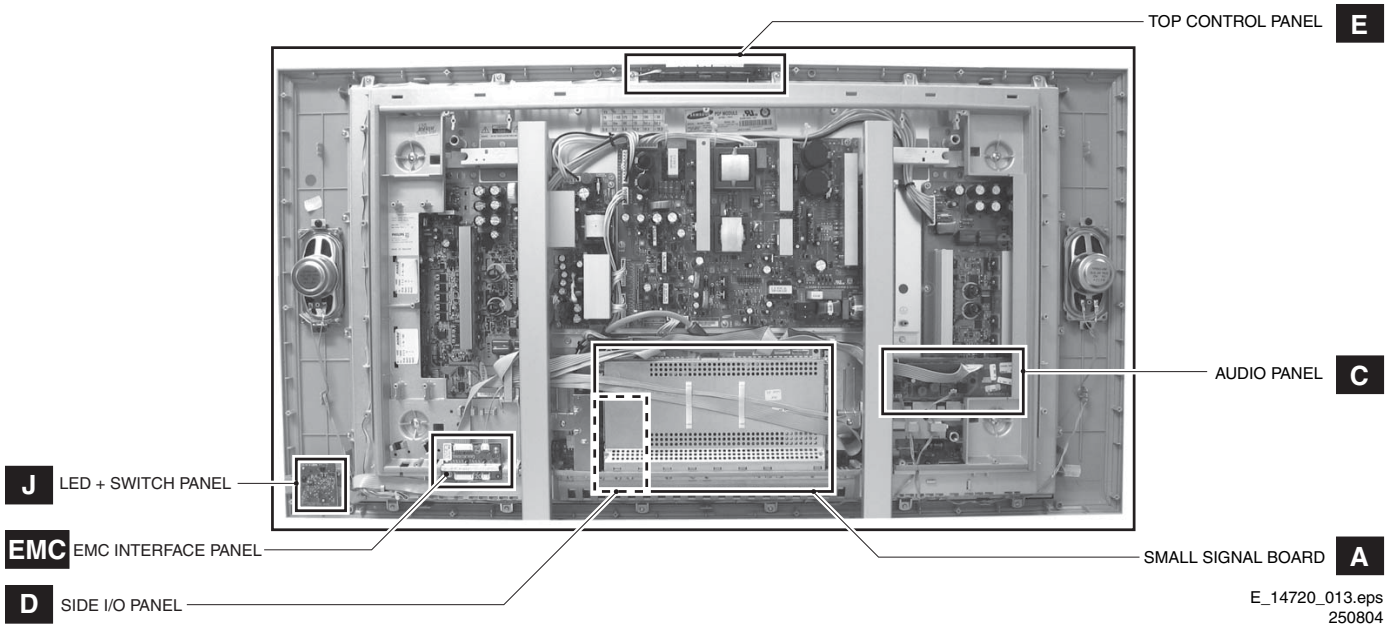

Figure 1-4 PWB / CBA locations

2. Safety Instructions, Warnings, and Notes

2.1 Safety Instructions

Safety regulations require that **during** a repair:
- Connect the set to the AC Power via an isolation transformer (> 800 VA).
- Replace safety components, indicated by the symbol ⚠, only by components identical to the original ones. Any other component substitution (other than original type) may increase risk of fire or electrical shock hazard.

Safety regulations require that **after** a repair, the set must be returned in its original condition. Pay in particular attention to the following points:
- Route the wire trees correctly and fix them with the mounted cable clamps.
- Check the insulation of the AC Power lead for external damage.
- Check the strain relief of the AC Power cord for proper function.
- Check the electrical DC resistance between the AC Power plug and the secondary side (only for sets which have a AC Power isolated power supply):
  1. Unplug the AC Power cord and connect a wire between the two pins of the AC Power plug.
  2. Set the AC Power switch to the "on" position (keep the AC Power cord unplugged!).
  3. Measure the resistance value between the pins of the AC Power plug and the metal shielding of the tuner or the aerial connection on the set. The reading should be between 4.5 Mohm and 12 Mohm.
  4. Switch "off" the set, and remove the wire between the two pins of the AC Power plug.
- Check the cabinet for defects, to avoid touching of any inner parts by the customer.

2.2 Warnings

- All ICs and many other semiconductors are susceptible to electrostatic discharges (ESD). Careless handling during repair can reduce life drastically. Make sure that, during repair, you are connected with the same potential as the mass of the set by a wristband with resistance. Keep components and tools also at this same potential.
  Available ESD protection equipment:
  – Complete kit ESD3 (small tablemat, wristband, connection box, extension cable and earth cable) 4822 310 10671.
  – Wristband tester 4822 344 13999.
- Be careful during measurements in the high voltage section.
- Never replace modules or other components while the unit is switched "on".
- When you align the set, use plastic rather than metal tools. This will prevent any short circuits and the danger of a circuit becoming unstable.

2.3 Notes

2.3.1 General

- Measure the voltages and waveforms with regard to the chassis (= tuner) ground (⏚), or hot ground (⏚), depending on the tested area of circuitry. The voltages and waveforms shown in the diagrams are indicative. Measure them in the Service Default Mode (see chapter 5) with a colour bar signal and stereo sound (L: 3 kHz, R: 1 kHz unless stated otherwise) and picture carrier at 475.25 MHz for PAL, or 61.25 MHz for NTSC (channel 3).
- Where necessary, measure the waveforms and voltages with (⊓⊔) and without (⊼⊽) aerial signal. Measure the voltages in the power supply section both in normal operation (⏻) and in standby (⏻). These values are indicated by means of the appropriate symbols.
- The semiconductors indicated in the circuit diagram and in the parts lists, are interchangeable per position with the semiconductors in the unit, irrespective of the type indication on these semiconductors.
- Manufactured under license from Dolby Laboratories. “Dolby” and the “double-D symbol”, are trademarks of Dolby Laboratories.

2.3.2 Schematic Notes

- All resistor values are in ohms and the value multiplier is often used to indicate the decimal point location (e.g. 2K2 indicates 2.2 kohm).
- Resistor values with no multiplier may be indicated with either an "E" or an "R" (e.g. 220E or 220R indicates 220 ohm).
- All capacitor values are given in micro-farads (μ= x10^{-6}), nano-farads (n= x10^{-9}), or pico-farads (p= x10^{-12}).
- Capacitor values may also use the value multiplier as the decimal point indication (e.g. 2p2 indicates 2.2 pF).
- An "asterisk" (*) indicates component usage varies. Refer to the diversity tables for the correct values.
- The correct component values are listed in the Electrical Replacement Parts List. Therefore, always check this list when there is any doubt.

2.3.3 Rework on BGA (Ball Grid Array) ICs

General
Although (LF)BGA assembly yields are very high, there may still be a requirement for component rework. By rework, we mean the process of removing the component from the PWB and replacing it with a new component. If an (LF)BGA is removed from a PWB, the solder balls of the component are deformed drastically so the removed (LF)BGA has to be discarded.

Device Removal
As is the case with any component that, it is essential when removing an (LF)BGA, the board, tracks, solder lands, or surrounding components are not damaged. To remove an (LF)BGA, the board must be uniformly heated to a temperature close to the reflow soldering temperature. A uniform temperature reduces the chance of warping the PWB.
To do this, we recommend that the board is heated until it is certain that all the joints are molten. Then carefully pull the component off the board with a vacuum nozzle. For the appropriate temperature profiles, see the IC data sheet.

Area Preparation
When the component has been removed, the vacant IC area must be cleaned before replacing the (LF)BGA.
Removing an IC often leaves varying amounts of solder on the mounting lands. This excessive solder can be removed with either a solder sucker or solder wick. The remaining flux can be removed with a brush and cleaning agent.
After the board is properly cleaned and inspected, apply flux on the solder lands and on the connection balls of the (LF)BGA.
Note: Do not apply solder paste, as this has shown to result in problems during re-soldering.

Device Replacement
The last step in the repair process is to solder the new component on the board. Ideally, the (LF)BGA should be aligned under a microscope or magnifying glass. If this is not possible, try to align the (LF)BGA with any board markers.
To reflow the solder, apply a temperature profile according to the *IC data sheet*. So as not to damage neighbouring components, it may be necessary to reduce some temperatures and times.

More Information
For more information on how to handle BGA devices, visit this URL: *www.atyourservice.ce.philips.com* (needs subscription, not available for all regions)). After login, select “Magazine”, then go to “Workshop Information”. Here you will find Information on how to deal with BGA-ICs.

2.3.4 Lead Free Solder

Some PWBs in this chassis are “lead-free **prepared**”. This is indicated on the PWB by the PHILIPS lead-free logo (either by a service-printing or by a sticker). It does not mean that lead-free solder is actually used!

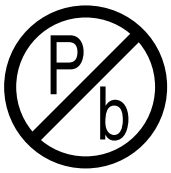

Figure 2-1 Lead-free logo

Due to this fact, some rules have to be respected by the workshop during a repair:

- Use only lead-free soldering tin Philips SAC305 with order code 0622 149 00106. If lead-free solder paste is required, please contact the manufacturer of your soldering equipment.
- Use only adequate solder tools applicable for lead-free soldering tin.
- Adjust your solder tool so that a temperature around 217 - 220 deg. C is reached at the solder joint.
- Do not mix lead-free soldering tin with leaded soldering tin; this will lead to unreliable solder joints!
- Use only original spare parts listed in this manual. These are lead-free parts!
- On the website *www.atyourservice.ce.philips.com* (needs subscription, not available for all regions) you can find more information on:
  - Aspects of lead-free technology.
  - BGA (de-)soldering, heating-profiles of BGAs used in Philips sets, and others.

2.3.5 Practical Service Precautions

- **It makes sense to avoid exposure to electrical shock.** While some sources are expected to have a possible dangerous impact, others of quite high potential are of limited current and are sometimes held in less regard.
- **Always respect voltages**. While some may not be dangerous in themselves, they can cause unexpected reactions - reactions that are best avoided. Before reaching into a powered TV set, it is best to test the high voltage insulation. It is easy to do, and is a good service precaution.

3. Directions for Use

You can download this information from the following websites:
http://www.philips.com/support
http://www.p4c.philips.com

4. Mechanical Instructions

Index of this chapter:
1. Cable Dressing
2. Service Positions
3. Assy/Panel Removal
4. Re-assembly

Notes:
- Figures below can deviate slightly from the actual situation, due to the different set executions.
- Follow the disassemble instructions in described order.

4.1 Cable Dressing

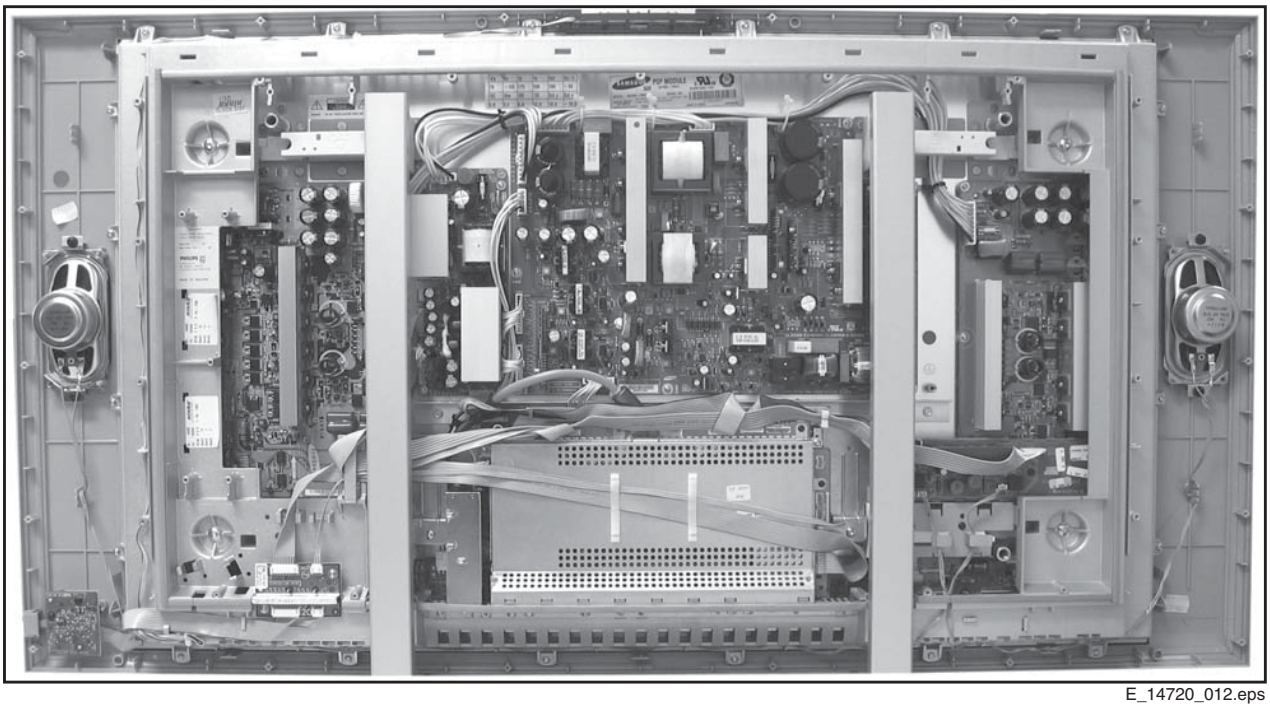

E_14720_012.eps
130804

Figure 4-1 Cable dressing

4.2 Service Positions

For easy servicing of this set, there are a few possibilities created:
- The buffers from the packaging (see figure "Rear cover").
- Foam bars (created for service).
- Aluminium service stands (created for Service).

4.2.1 Foam Bars

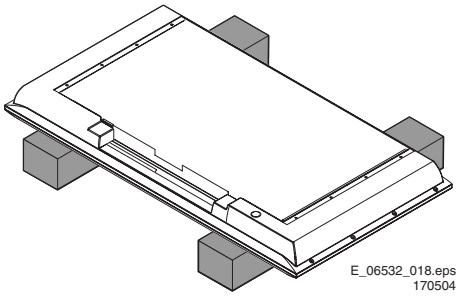

E_06532_018.eps
170504

Figure 4-2 Foam bars

The foam bars (order code 3122 785 90580 for two pieces) can be used for all types and sizes of Flat TVs. By laying the TV face down on the (ESD protective) foam bars, a stable situation is created to perform measurements and alignments.
By placing a mirror under the TV, you can monitor the screen.

4.2.2 Aluminium Stands

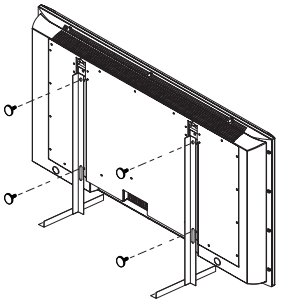

E_06532_019.eps
170504

Figure 4-3 Aluminium stands (drawing of MkI)

The aluminium stands (order code 3122 785 90480) can be mounted with the back cover removed or still left on. So, the stand can be used to store products or to do measurements. It is also very suitable to perform duration tests without taking much space, without having the risk of overheating, or the risk of products falling. The stands can be mounted and removed quick and easy with use of the delivered screws that can be tightened and loosened manually without the use of tools. See figure above.

Note: Only use the delivered screws to mount the monitor to the stands.

4.3 Assy/Panel Removal

4.3.1 Metal Back Plate

Warning: Disconnect the mains power cord before you open the set.

1. Place the TV set upside down on a table top, using the foam bars (see part "Foam Bars").
   Caution: do **not** put pressure on the display, but let the monitor lean on the speakers or the Front cover.
2. Remove all T10 screws from the metal back plate.
3. Then, remove the four "mushrooms" from the back plate.
4. Lift the back plate from the set. Make sure that wires and flat foils are not damaged during the back plate removal.

4.3.2 Rear Cover

1. Remove the screws that secure the rear cover. The screws are located at the top, bottom, left and right sides.
2. Lift the rear cover from the cabinet. Make sure that wires and flat foils are not damaged during cover removal.

4.3.3 EMC Interface Panel

1. Disconnect the cables from the panel.
2. Remove the fixation screws.
3. Take out the panel.

4.3.4 LED/Switch Panel

1. Remove the fixation screws.
2. Take out the panel.
3. Disconnect the cable from the rear of the panel.

4.3.5 Top Control Panel

1. Remove the fixation screws.
2. Release the two fixation clamps and lift the panel out of the bracket.
3. Take out the panel.
4. Disconnect the cable from the panel.

4.3.6 Small Signal Panel (SSB) and Side I/O Panel

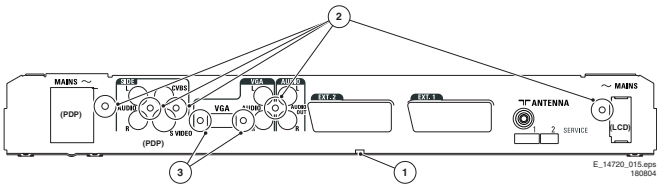

Figure 4-4 SSB Connector plate

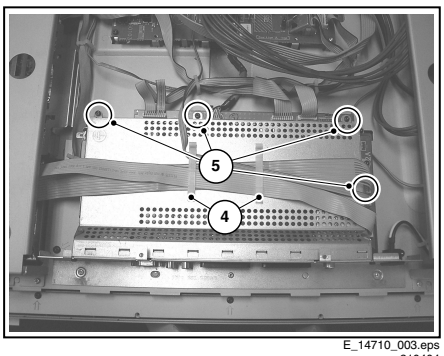

Figure 4-5 Shielding of the SSB

1. Remove the middle fixation screw (1) from the bottom side of the connector plate (as this holds the SSB bracket).
   Note: Sometimes it is easier to loosen the complete connector plate and remove it together with the SSB.
2. Remove all connector fixation screws (2) from the front side of the connector plate.
3. Remove the two female screw locks (3) of the VGA connector.
4. Release the plastic cable clips (4) on the shielding and disconnect all cables from the SSB.
   Note: Be careful with the fragile LVDS connector on the SSB.
5. Now, completely remove the SSB (together with all the shieldings) from the set.
6. Once the SSB is out, remove the fixation screws (5) from the shielding.
7. Remove the shielding, it hinges at the left side (acc. photo).
8. Remove the fixation screws that hold the panel(s), and take out the panel(s).

Notes:
- Pay special attention to the EMC foam on the SSB shielding. These must be replaced in their initial positions during set re-assembly.
- Insulate the tuner pins, so they cannot touch the shielding (see also figure “SDM Service jumper” in Chapter 5).

4.3.7 Audio Panel

1. Disconnect all cables from the panel.
2. Remove the fixation screws and take out the panel.

4.3.8 Plasma Panel

Important: Be sure to work in a dust free environment during the following activities. In addition, the use of (fabric) hand gloves is advised.

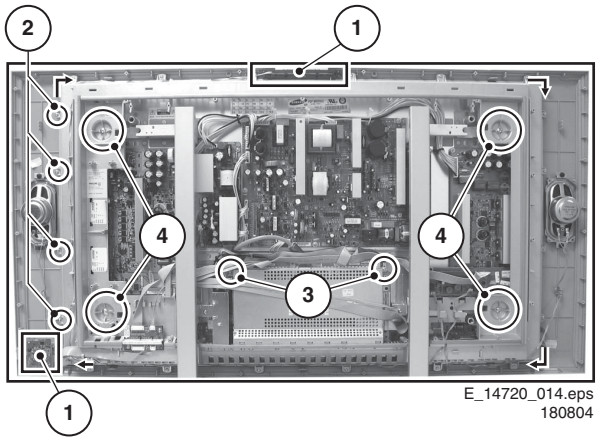

Figure 4-6 Plasma panel disassembly

Disassembly

1. Place the TV set face down on the foam bars. Place the bars at the edges of the set, so they will support the front frame and not only the glass plate!
2. Remove the LED/Switch and Top Control panels (1).
3. Next step is to unplug the following cables (see also “Wiring Diagram” in Chapter 6):
   – AC Power (Mains) plug between Mains Filter and PSU (loosen cable from clamps).
   – All cables on the Audio panel.
   – LVDS plug on SSB. **Caution:** Be careful, because this connection is very fragile!
   – SSB supply plugs on PSU.
   – Audio Panel supply plug on PSU.

– Loudspeaker connections on speakers.

4. Remove all T10 parker screws around the frame (2).
5. Remove the two T10 tapping screws that hold the SSB (3).
6. Remove the four T25 screws (4) that hold the plasma panel.
7. Lift the (gold coloured) plastic frame together with its PWBs (except the Audio Panel) from the PDP panel.
8. Now the PDP (incl. the PSU and driving panels) can be removed.
9. Before sending the plasma panel to the NSO for repair or exchange, remove all its panels.

Assembly

In order to centre the (new) plasma panel correctly w.r.t. the glass plate, do the following:

1. Place the (new) plasma panel face down on foam bars.
2. Also, place the front assy (front panel with glass plate) on two other foam bars.
3. Mount the plastic frame on the plasma panel.
4. Lift the assy (frame and PDP), and place it into the front assy.
5. Now follow the above described disassembly process in reverse order.

4.4 Set Re-assembly

To re-assemble the whole set, execute all processes in reverse order.

Notes:

- While re-assembling, make sure that all cables are placed and connected in their original position. See figure "Cable dressing".
- Pay special attention not to damage the EMC foams at the SSB shields. Control that EMC foams are put correctly on their places.

5. Service Modes, Error Codes, and Fault Finding

Index of this chapter:
1. Test Points
2. Service Modes
3. Problems and Solving Tips (related to CSM)
4. ComPair
5. Error Codes
6. The Blinking LED Procedure
7. Fault Finding and Repair Tips

5.1 Test Points

This chassis is equipped with test points in the service printing. In the schematics test points are identified with a rectangle box around Fxxx or Ixxx. These test points are specifically mentioned in the service manual as “half moons” with a dot in the centre.
Perform measurements under the following conditions:
- Television set in Service Default Alignment Mode.
- Video input: Colour bar signal.
- Audio input: 3 kHz left channel, 1 kHz right channel.

5.2 Service Modes

Service Default mode (SDM) and Service Alignment Mode (SAM) offers several features for the service technician, while the Customer Service Mode (CSM) is used for communication between the call centre and the customer.

This chassis also offers the option of using ComPair, a hardware interface between a computer and the TV chassis. It offers the abilities of structured troubleshooting, error code reading, and software version read-out for all chassis.
Minimum requirements for ComPair: a Pentium processor, a Windows OS, and a CD-ROM drive (see also paragraph "ComPair").

5.2.1 Service Default Mode (SDM)

Purpose
- To create a predefined setting for measurements to be made.
- To override software protections.
- To start the blinking LED procedure.
- To inspect the error buffer.
- To check the life timer.

Specifications
- Tuning frequency: 475.25 MHz.
- Colour system: PAL B/G.
- All picture settings at 50% (brightness, colour contrast, hue).
- Bass, treble and balance at 50%; volume at 25%.
- All service-unfriendly modes (if present) are disabled. The service unfriendly modes are:
  - Timer / Sleep timer.
  - Child / parental lock.
  - Blue mute.
  - Hotel / hospital mode.
  - Auto shut off (when no “IDENT” video signal is received for 15 minutes).
  - Skipping of non-favourite presets / channels.
  - Auto-storage of personal presets.
  - Auto user menu time-out.
  - Auto Volume Levelling (AVL).

How to enter
To enter SDM, use one of the following methods:
- Press the following key sequence on the remote control transmitter: “062596” directly followed by the MENU button (do not allow the OSD display to time out between entries while keying the sequence).
- Short SDM jumper (item 4022, see Figure "Service jumper") on the TV board and apply AC Power. Remove the short after start-up.
  Caution: Entering SDM by shorting "Service" jumpers will override the software protections. Do this only for a short period. **When doing this, the service-technician must know exactly what he is doing, as it could damage the television set**.

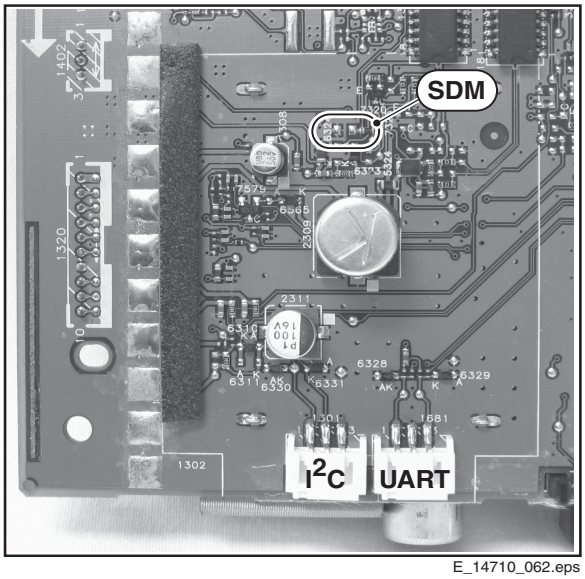

E_14710_062.eps
260804

Figure 5-1 SDM Service jumper

After entering SDM, the following screen is visible, with SDM in the upper right corner of the screen to indicate that the television is in Service Default Alignment Mode.

```
00022    LC42EP1 2.03/S42GV1  2.02     SDM
ERR 0 0 0 0 0
OP 000 057 140 032 120 128 000
```

E_14710_006.eps
240604

Figure 5-2 SDM menu (example from LC4.2E)

How to navigate
When you press the MENU button on the remote control, the set will switch on the normal user menu in the SDM mode.

How to exit
Switch the set to STANDBY by pressing the POWER button on the remote control transmitter.
If you turn the television set off by removing the mains (i.e., unplugging the television) or by using the POWER button on the TV set, the television set will remain in SDM when mains is re-applied, and the error buffer is not cleared.

5.2.2 Service Alignment Mode (SAM)

Purpose
- To change option settings.
- To display / clear the error code buffer.
- To perform alignments.

Specifications
- Operation hours counter (maximum five digits displayed).
- Software version, Error codes, and Option settings display.
- Error buffer clearing.
- Option settings.
- Software alignments (Tuner, White Tone, Geometry, and Audio).
- NVM Editor.
- ComPair Mode switching.

How to enter
Press the following key sequence on the remote control transmitter: “062596" directly followed by the OSD/STATUS/INFO button (do not allow the OSD display to time out between entries while keying the sequence).

After entering SAM, the following screen is visible, with SAM in the upper right corner of the screen to indicate that the television is in Service Alignment Mode.

```
00022   LC42EP1 2.03/S42GV1  2.02     SAM
ERR 0 0 0 0 0

OP 000 057 140 032 120 128 000

. Clear                 Clear ?  ▶
. Options          ▶
. Tuner            ▶
. White Tone       ▶
. Audio            ▶
. NVM Editor       ▶
. SC NVM Editor    ▶
. Test Pattern     ▶
. ComPair Mode     ▶  On
```

E_14710_007.eps
240604

Figure 5-3 SAM menu (example from LC4.2E)

Menu explanation
1. **LLLLL.** This represents the run timer. The run timer counts normal operation hours (including “on/off” switching), but does not count stand-by hours.
2. **AAAABCD-X.YY/EEEEEE_F.GG.** This is the software identification of the Main/Scaler microprocessor:
   - **A**= the chassis name.
   - **B**= the region: E= Europe, A= Asia Pacific, U= NAFTA, L= LATAM.
   - **C**= the software diversity:
     - **Europe:** T= 1 pg TXT, F= Full TXT, V= Voice ctrl.
     - **LATAM and NAFTA:** N= Stereo non-dBx, S= Stereo dBx.
     - **Asian Pacific:** T= TXT, N= non-TXT, C= NTSC.
     - **ALL regions:** M= mono, D= DVD, Q= Mk2.
   - **D**= the language cluster number.
   - **X**= the Main software version number (updated with a major change that is incompatible with previous versions).
   - **YY**= the sub software version number (updated with a minor change that is compatible with previous versions).
   - **EEEEEE**= the Scaler SW cluster
   - **F**= the Scaler SW version no.
   - **GG**= the sub-version no.
3. **SAM.** Indication of the Service Alignment Mode.
4. **Error Buffer (ERR).** Shows all errors detected since the last time the buffer was erased. Five errors possible.
5. **Option Bytes (OP).** Shows all option settings. See “Options” in the Alignments section for a detailed description. Seven codes are available.
6. **Clear.** Erases the contents of the error buffer. Select the CLEAR menu item and press the CURSOR RIGHT key. The content of the error buffer is cleared.
7. **Options.** Used to set the option bits. See “Options” in the Alignments section for a detailed description.
8. **Tuner.** Used to align the tuner. See “Tuner” in the Alignments section for a detailed description.
9. **White Tone.** Used to align the white tone. See “White Tone” in the Alignments section for a detailed description.
10. **Audio.** No audio alignment is necessary for this television set.
11. **NVM Editor.** Can be used to change the NVM data in the television set.
12. **SC NVM Editor.** Can be used to edit Scaler NVM.
13. **Test Pattern.** For future use.
14. **ComPalr.** Can be used to switch the television to “In System Programming” (ISP) mode, for software uploading via ComPair.
    Caution: When this mode is selected without ComPair connected, the TV will be blocked. Remove the AC power to reset the TV.

How to navigate
- In SAM, select menu items with the CURSOR UP/DOWN keys on the remote control transmitter. The selected item will be highlighted. When not all menu items fit on the screen, use the CURSOR UP/DOWN keys to display the next / previous menu items.
- With the CURSOR LEFT/RIGHT keys, it is possible to:
  - Activate the selected menu item.
  - Change the value of the selected menu item.
  - Activate the selected submenu.
- In SAM, when you press the MENU button twice, the set will switch to the normal user menus (with the SAM mode still active in the background). To return to the SAM menu press the MENU button again.
- When you press the MENU key in while in a submenu, you will return to the previous menu.

How to store SAM settings
To store the settings changed in SAM mode, leave the top level SAM menu by using the POWER button on the remote control transmitter or the television set.

How to exit
Switch the set to STANDBY by pressing the POWER button on the remote control transmitter or on the television set.

5.2.3 Customer Service Mode (CSM)

Purpose
The Customer Service Mode shows error codes and information on the TV’s operation settings. The call centre can instruct the customer (by telephone) to enter CSM in order to identify the status of the set. This helps the call centre to diagnose problems and failures in the TV set before making a service call.
The CSM is a read-only mode; therefore, modifications are not possible in this mode.

How to enter
To enter CSM, press the following key sequence on the remote control transmitter: “123654” (do not allow the OSD display to time out between entries while keying the sequence).

Upon entering the Customer Service Mode, the following screen will appear:

```
1 00022    LC42EP1 2.03/S42GV1  2.02  CSM
2 CODES 0 0 0 0 0
3 OP 000 057 140 032 120 128 000
4
5
6 NOT TUNED
7 PAL
8 STEREO
9 CO 50 CL 50 BR 50
0 AVL Off
```

E_14710_008.eps
240604

Figure 5-4 CSM menu (example from LC4.2E)

Menu explanation

1. Indication of the decimal value of the operation hours counter, Main/Scaler software version (see "Service Alignment Mode" for an explanation), and service mode (CSM= Customer Service Mode).
2. Displays the last five errors detected in the error code buffer.
3. Displays the option bytes.
4. Displays the type number version of the set (option).
5. Reserved.
6. Indicates the television is receiving an "IDENT" signal on the selected source. If no "IDENT" signal is detected, the display will read "NOT TUNED"
7. Displays the detected Colour system (e.g. PAL/NTSC).
8. Displays the detected Audio (e.g. stereo/mono).
9. Displays the picture setting information.
10. Displays the sound setting information.

How to exit

To exit CSM, use one of the following methods:

- Press the MENU, STATUS (or EXIT/INFO/[i+]), or POWER button on the remote control transmitter.
- Press the POWER button on the television set.

5.3 Problems and Solving Tips Related to CSM

5.3.1 Picture Problems

Note: The problems described below are all related to the TV settings. The procedures used to change the value (or status) of the different settings are described.

Picture too dark or too bright

If:

- The picture improves when you press the AUTO PICTURE button on the remote control transmitter, or
- The picture improves when you enter the Customer Service Mode,

Then:

1. Press the AUTO PICTURE button on the remote control transmitter repeatedly (if necessary) to choose PERSONAL picture mode.
2. Press the MENU button on the remote control transmitter. This brings up the normal user menu.
3. In the normal user menu, use the CURSOR UP/DOWN keys to highlight the PICTURE sub menu.
4. Press the CURSOR LEFT/RIGHT keys to enter the PICTURE sub menu.
5. Use the CURSOR UP/DOWN keys (if necessary) to select BRIGHTNESS.
6. Press the CURSOR LEFT/RIGHT keys to increase or decrease the BRIGHTNESS value.
7. Use the CURSOR UP/DOWN keys to select PICTURE.
8. Press the CURSOR LEFT/RIGHT keys to increase or decrease the PICTURE value.
9. Press the MENU button on the remote control transmitter twice to exit the user menu.
10. The new PERSONAL preference values are automatically stored.

White line(s) around picture elements and text

If:

The picture improves after you have pressed the AUTO PICTURE button on the remote control transmitter,

Then:

1. Press the AUTO PICTURE button on the remote control transmitter repeatedly (if necessary) to choose PERSONAL picture mode.
2. Press the MENU button on the remote control transmitter. This brings up the normal user menu.
3. In the normal user menu, use the CURSOR UP/DOWN keys to highlight the PICTURE sub menu.
4. Press the CURSOR LEFT/RIGHT keys to enter the PICTURE sub menu.
5. Use the CURSOR UP/DOWN keys to select SHARPNESS.
6. Press the CURSOR LEFT key to decrease the SHARPNESS value.
7. Press the MENU button on the remote control transmitter twice to exit the user menu.
8. The new PERSONAL preference value is automatically stored.

Snowy picture

Check CSM line 6. If this line reads “Not Tuned”, check the following:

- Antenna not connected. Connect the antenna.
- No antenna signal or bad antenna signal. Connect a proper antenna signal.
- The tuner is faulty (in this case line 2, the Error Buffer line, will contain error number 10). Check the tuner and replace/repair the tuner if necessary.

Black and white picture

If:

- The picture improves after you have pressed the AUTO PICTURE button on the remote control transmitter,

Then:

1. Press the AUTO PICTURE button on the remote control transmitter repeatedly (if necessary) to choose PERSONAL picture mode.
2. Press the MENU button on the remote control transmitter. This brings up the normal user menu.
3. In the normal user menu, use the CURSOR UP/DOWN keys to highlight the PICTURE sub menu.
4. Press the CURSOR LEFT/RIGHT keys to enter the PICTURE sub menu.
5. Use the CURSOR UP/DOWN keys to select COLOUR.
6. Press the CURSOR RIGHT key to increase the COLOUR value.
7. Press the MENU button on the remote control transmitter twice to exit the user menu.
8. The new PERSONAL preference value is automatically stored.

Menu text not sharp enough

If:
- The picture improves after you have pressed the AUTO PICTURE button on the remote control transmitter,

Then:
1. Press the AUTO PICTURE button on the remote control transmitter repeatedly (if necessary) to choose PERSONAL picture mode.
2. Press the MENU button on the remote control transmitter. This brings up the normal user menu.
3. In the normal user menu, use the CURSOR UP/DOWN keys to highlight the PICTURE sub menu.
4. Press the CURSOR LEFT/RIGHT keys to enter the PICTURE sub menu.
5. Use the CURSOR UP/DOWN keys to select PICTURE.
6. Press the CURSOR LEFT key to decrease the PICTURE value.
7. Press the MENU button on the remote control transmitter twice to exit the user menu.
8. The new PERSONAL preference value is automatically stored.

5.4 ComPair

5.4.1 Introduction

ComPair (Computer Aided Repair) is a service tool for Philips Consumer Electronics products. ComPair is a further development on the European DST (service remote control), which allows faster and more accurate diagnostics. ComPair has three big advantages:
- ComPair helps you to quickly get an understanding on how to repair the chassis in a short time by guiding you systematically through the repair procedures.
- ComPair allows very detailed diagnostics (on I^2C level) and is therefore capable of accurately indicating problem areas. You do not have to know anything about I^2C commands yourself because ComPair takes care of this.
- ComPair speeds up the repair time since it can automatically communicate with the chassis (when the microprocessor is working) and all repair information is directly available. When ComPair is installed together with the Force/SearchMan electronic manual of the defective chassis, schematics and PWBs are only a mouse click away.

5.4.2 Specifications

ComPair consists of a Windows based fault finding program and an interface box between PC and the (defective) product. The ComPair interface box is connected to the PC via a serial (or RS232) cable.
For this chassis, the ComPair interface box and the TV communicate via a bi-directional service cable via the service connector(s).

The ComPair fault finding program is able to determine the problem of the defective television. ComPair can gather diagnostic information in two ways:
- Automatic (by communication with the television): ComPair can automatically read out the contents of the entire error buffer. Diagnosis is done on I^2C/UART level. ComPair can access the I^2C/UART bus of the television. ComPair can send and receive I^2C/UART commands to the micro controller of the television. In this way, it is possible for ComPair to communicate (read and write) to devices on the I^2C/UART buses of the TV-set.
- Manually (by asking questions to you): Automatic diagnosis is only possible if the micro controller of the television is working correctly and only to a certain extend. When this is not the case, ComPair will guide you through the fault finding tree by asking you questions (e.g. *Does the screen give a picture? Click on the correct answer: YES / NO*) and showing you examples (e.g. *Measure test-point I7 and click on the correct oscillogram you see on the oscilloscope*). You can answer by clicking on a link (e.g. text or a waveform picture) that will bring you to the next step in the fault finding process.

By a combination of automatic diagnostics and an interactive question / answer procedure, ComPair will enable you to find most problems in a fast and effective way.

Beside fault finding, ComPair provides some **additional features** like:
- Up- or downloading of pre-sets.
- Managing of pre-set lists.
- Emulation of the (European) Dealer Service Tool (DST).
- If both ComPair and Force/SearchMan (Electronic Service Manual) are installed, all the schematics and the PWBs of the set are available by clicking on the appropriate hyperlink.
  Example: *Measure the DC-voltage on capacitor C2568 (Schematic/Panel) at the Mono-carrier.*
  – Click on the “Panel” hyperlink to automatically show the PWB with a highlighted capacitor C2568.
  – Click on the “Schematic” hyperlink to automatically show the position of the highlighted capacitor.

5.4.3 How To Connect

1. First, install the ComPair Browser software (see the Quick Reference Card for installation instructions).
2. Connect the RS232 interface cable between a free serial (COM) port of your PC and the PC connector (marked with “PC”) of the ComPair interface.
3. Connect the mains adapter to the supply connector (marked with “POWER 9V DC”) of the ComPair interface.
4. Switch the ComPair interface “OFF”.
5. Switch the television set “OFF” with the POWER switch.
6. Connect the ComPair I^2C/UART interface cable between the connector on the rear side of the ComPair interface (marked with “I^2C” or for UART on the connector marked “VCR”) and the appropriate ComPair connector at the rear side of the TV (I^2C or UART).
   Note: Some chassis need an additional I^2C extension cable due to a different connector pitch!
7. Plug the mains adapter in a mains outlet, and switch the interface “ON”. The green and red LEDs light up together. The red LED extinguishes after approx. 1 second while the green LED remains lit.
8. Start the ComPair program and read the “Introduction” chapter.

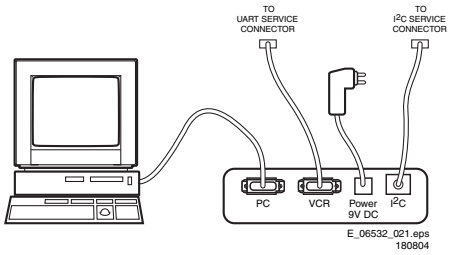

Figure 5-5 ComPair Interface connection

5.4.4 How To Order

ComPair order codes (EU/AP/LATAM):
- Starter kit ComPair32/SearchMan32 software and ComPair interface (excl. transformer): 3122 785 90450.
- ComPair interface (excluding transformer): 4822 727 21631.
- Starter kit ComPair32 software (registration version): 3122 785 60040.

- Starter kit SearchMan32 software: 3122 785 60050.
- ComPair32 CD (update): 3122 785 60070 (year 2002, 3122 785 60110 (year 2003).
- SearchMan32 CD (update): 3122 785 60080 (year 2002), 3122 785 60120 (year 2003), 3122 785 60130 (year 2004).
- ComPair I^2C interface cable: 3122 785 90004.
- ComPair firmware upgrade IC: 3122 785 90510.
- Transformer (non-UK): 4822 727 21632.
- Transformer (UK): 4822 727 21633.
- ComPair I^2C extension cable: 3139 131 03791.
- ComPair UART interface cable: 3122 785 90630.

Note: If you encounter any problems, contact your local support desk.

5.5 Error Codes

The error code buffer contains all errors detected since the last time the buffer was erased. The buffer is written from left to right. When an error occurs that is not yet in the error code buffer, it is displayed at the left side and all other errors shift one position to the right.

5.5.1 How To Read The Error Buffer

You can read the error buffer in 3 ways:
- On screen via the SAM (if you have a picture).
  Examples:
  – ERROR: 0 0 0 0 0: No errors detected
  – ERROR: 6 0 0 0 0: Error code 6 is the last and only detected error
  – ERROR: 9 6 0 0 0: Error code 6 was detected first and error code 9 is the last detected (newest) error
- Via the blinking LED procedure (when you have no picture). See “The Blinking LED Procedure”.
- Via ComPair.

5.5.2 How To Clear The Error Buffer

The error code buffer is cleared in the following cases:
- By using the CLEAR command in the SAM menu:
  – To enter SAM, press the following key sequence on the remote control transmitter: “062596” directly followed by the OSD/STATUS button (do not allow the OSD display to time out between entries while keying the sequence).
  – Make sure the menu item CLEAR is highlighted. Use the CURSOR UP/DOWN buttons, if necessary.
  – Press the CURSOR RIGHT button to clear the error buffer. The text on the right side of the “CLEAR” line will change from “CLEAR?” to “CLEARED”
- If an error does not reoccur within 50 hours it is deleted from the error buffer.

5.5.3 Error Codes

In case of non-intermittent faults, write down the errors present in the error buffer and clear the error buffer before you begin the repair. This ensures that old error codes are no longer present.
If possible, check the entire contents of the error buffer. In some situations, an error code is only the result of another error and not the actual cause of the problem (for example, a fault in the protection detection circuitry can also lead to a protection).

Table 5-1 Error code overview

Error	Device	Error description	Check item	Diagram
0	Not applicable	-	-	-
1	Not applicable	-	-	-
2	Not applicable	-	-	-
3	Not applicable	-	-	-
4	GM1501 Scaler Flash-ROM	I^2C error while communicating with the Genesis Scaler and/or Flash-ROM is faulty/empty	7401 7530	A7 A11
5	Not applicable	+5V protection	7930	A6
6	I^2C bus	General I^2C error	7011, 3088, 3096	A2
7	Not applicable	-	-	-
8	M24C32	I^2C error while communicating with the Scaler EEPROM	7531	A11
9	M24C16	I^2C error while communicating with the EEPROM	7099	A2
10	Tuner	I^2C error while communicating with the PLL tuner	1302, 3302, 3303, 3327	A1
11	Not applicable	-	-	-
12	Not applicable	-	-	-
13	Not applicable	-	-	-
14	K4D263238M	Read-write error with the Scaler SDRAM	7501	A10
15	TDA9178T/N1	I^2C error while communicating with Histogram	7560	A3
16	TDA9178T/N1	I^2C error while communicating with EPLD on Pixel Plus panel	7560	A3

5.6 The Blinking LED Procedure

Using this procedure, you can make the contents of the error buffer visible via the front LED. This is especially useful when there is no picture.

When the SDM is entered, the front LED will blink the contents of the error-buffer:
- The Led blinks with as many pulses as the error code number, followed by a time period of 1.5 seconds, in which the Led is off.
- Then this sequence starts is repeated.

Any RC5 command terminates this sequence.

Example of error buffer: **12 9 6 0 0**
After entering SDM, the following occurs:
- 1 long blink of 5 seconds to start the sequence,
- 12 short blinks followed by a pause of 1.5 seconds,
- 9 short blinks followed by a pause of 1.5 seconds,
- 6 short blinks followed by a pause of 1.5 seconds,
- 1 long blink of 1.5 seconds to finish the sequence,
- The sequence starts again at 12 short blinks.

5.7 Fault Finding and Repair Tips

Notes:
- It is assumed that the components are mounted correctly with correct values and no bad solder joints.
- Before any fault finding actions, check if the correct options are set.

5.7.1 NVM Editor

In some cases, it can be handy if one directly can change the NVM contents. This can be done with the “NVM Editor” in SAM mode. With this option, single bytes can be changed.

	Hex	Dec	Description
.ADR	0x000A	10	Existing value
.VAL	0x0000	0	New value
.Store	Store ?		

5.7.2 Load default NVM values

In case a blank NVM is placed or when the NVM content is corrupted, default values can be downloaded into the NVM. After the default values are downloaded it will be possible to start up and to start aligning the TV set. This is no longer initiated automatically; to initiate the download the following action has to be performed:

1. Switch the TV set “off” via the AC Power switch.
2. Short circuit the SDM jumpers (keep short-circuited).
3. Press P+ or Ch+ on the local keyboard (and keep it pressed).
4. Switch the TV set “on” via the AC Power switch.
5. When the set has started, the P+/Ch+ button can be released and the short circuit of the SDM jumpers can be removed.
6. The red LED will be on continuously to indicate that the download is initiated (normally when SDM is activated the red LED will start with the Blinking LED sequence).
7. Wait +/- 30 s (time needed to download default values to the NVM).

5.7.3 Tuner and IF

No Picture in RF mode

1. Check whether picture is present in EXT. If not, go to Video processing troubleshooting section.
2. If present, check that the Option settings are correct.
3. Check that all supply voltages are present.
4. Check if I^2C lines are working correctly (3.3V).
5. Manually store a known channel and check if there is IF output at Tuner pin 11.
6. Feed in 105 dBuV at Tuner pin 11 and check whether there is RGB output from Video Processing IC. If yes, Tuner may be defect. Replace Tuner.

Required system is not selected correctly

1. Check whether a Service jumper (#4022, 0805 size) is present. If yes, remove it.

5.7.4 Video Processing

No power

1. Check +12 V and 3V3 at position 1910.
2. If no supply, check the connector 1910.
3. If it is correct, check the power supply board.

Power supply is correct but no green LED

1. Check if connectors 1005 and 1601 are properly inserted.
2. If yes, check if the 3V3 is present.

No picture display

1. Check the RGB signal.
2. If it is present, check 3-IC7016 (NE555).
3. If it has output, the problem is in SCALER part.
4. Otherwise, check H-out on pin 2 of NE555. If the input signal of pin2 is present, but no output, the IC is defect.

Note:

- If the H-out (pin 67) doesn’t have signal or the level is low, check the output of NE555 (pin 3) during start up.
- If the H-out (pin 67) has a signal (or has a signal for a very short time), change IC7016 (NE555).

No TV but PC is present

1. Check if HSYNC and VSYNC are present at pin 3 of 7017 and 7015.
2. If they are present, check RGB output.
3. If there is no RGB output, the IC TDA120xx can be defect.

Comb Filter not working

Check Option Byte 5 in SAM (see also chapter 8 “Alignments”).

5.7.5 Power Supply

This power supply is for Service a “black box”. When defective, (this can be traced by error-codes in the error buffer, or by strange phenomena), a new panel must be ordered and after receipt, the defective panel must be send in for repair.
For some basic voltage-measurements, you can use the block diagram(s) in Chapter 6.

6. Block Diagrams, Testpoint Overviews, and Waveforms

Wiring Diagram

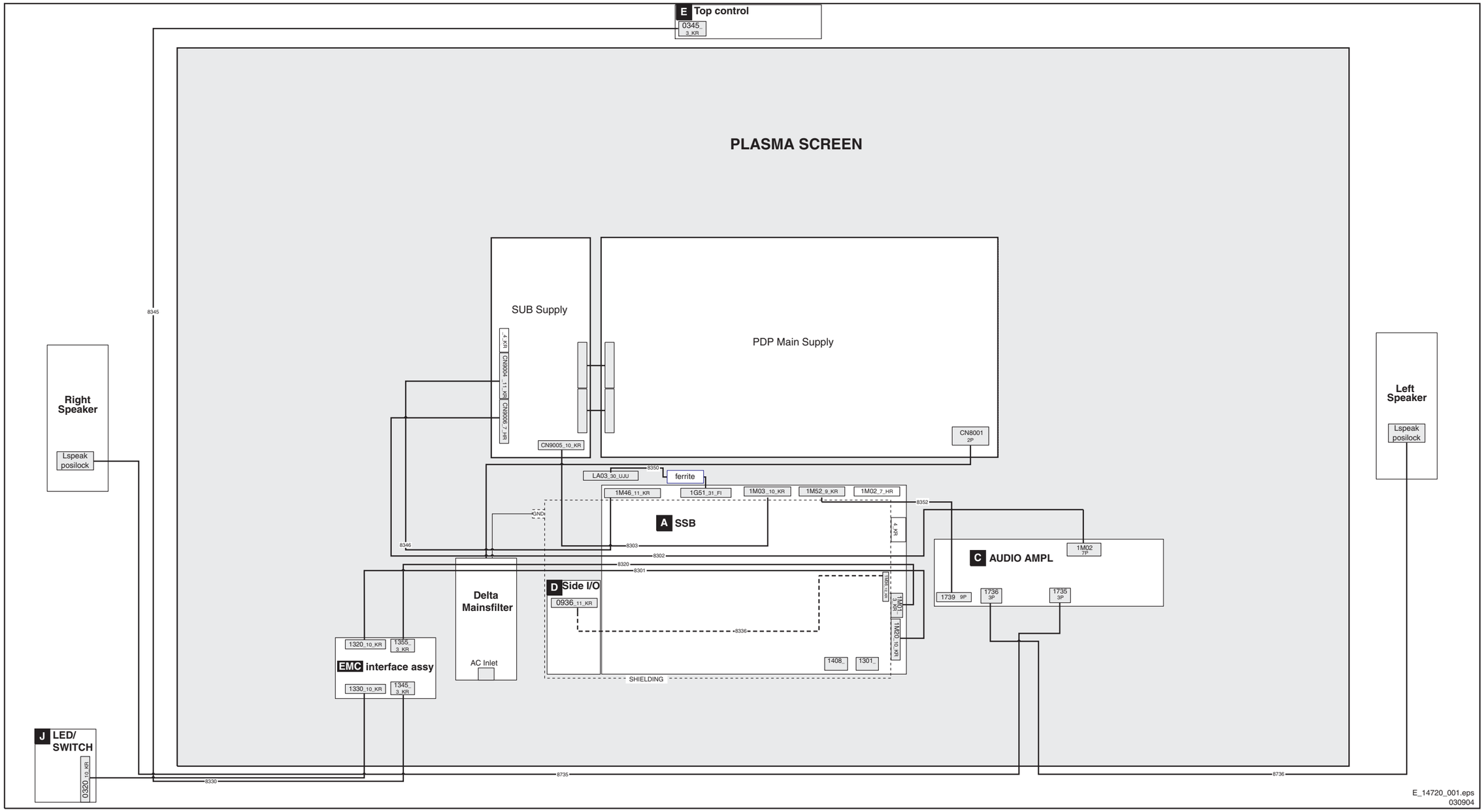

E_14720_001.eps
030904

Block Diagram Audio and Video

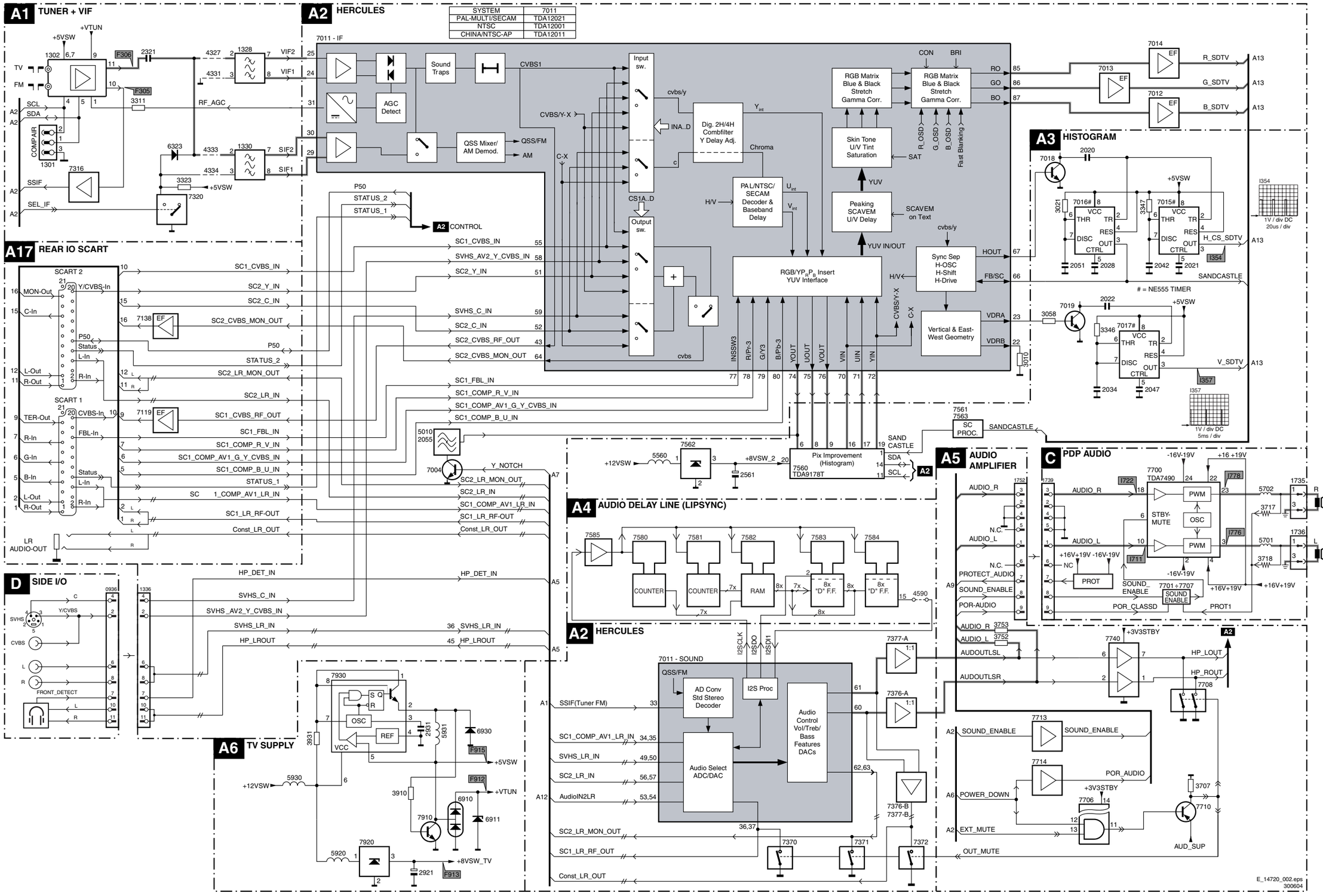

Block Diagram Audio and Video

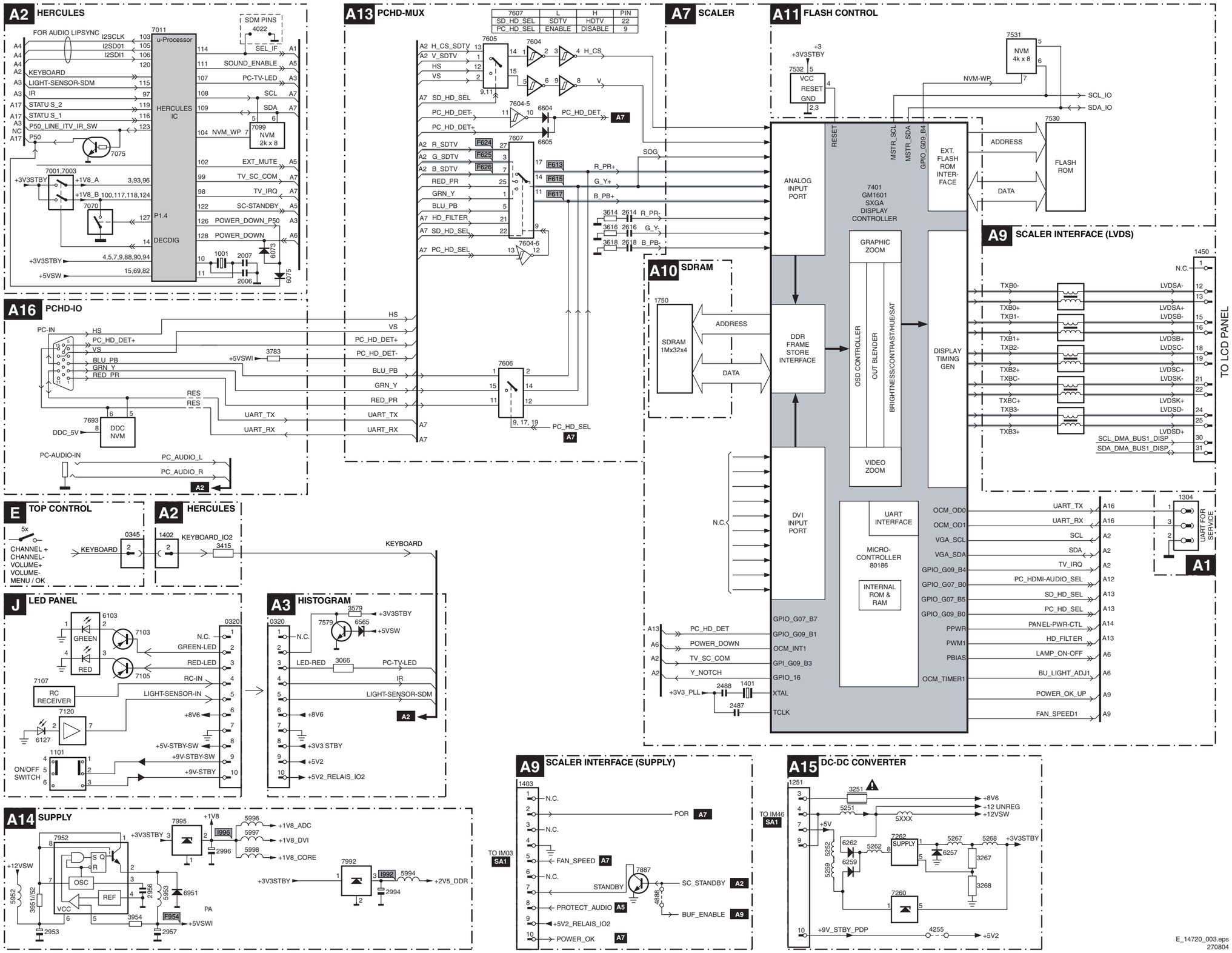

Testpoint Overview SSB (Top Side)

F002	B2	F014	C3	F029	C3	F041	B3	F053	C3	F075	B3	F090	C3
F003	D2	F018	C3	F030	C3	F042	C4	F058	C4	F076	B3	F093	C2
F004	B4	F019	B4	F031	C3	F043	C3	F060	B4	F077	B1	F094	C3
F005	C4	F020	C3	F032	C3	F044	B4	F061	C4	F078	B1	F095	C4
F006	C4	F021	B4	F033	C4	F045	C4	F062	C4	F079	B1	F096	C4
F007	B3	F022	B3	F034	C3	F046	C3	F063	C4	F080	B1	F099	A3
F008	B3	F023	B3	F035	C3	F047	C3	F067	C4	F081	B1	F101	D3
F009	B3	F024	B1	F036	C3	F048	B1	F068	C4	F082	C1	F101	D3
F010	B2	F025	B1	F037	A2	F049	C3	F069	C4	F083	B1	F102	D4
F011	B2	F026	C1	F038	C3	F050	C4	F071	B4	F087	B3	F102	D4
F012	B3	F027	B1	F039	B2	F051	C3	F072	B1	F088	B3	F103	D3
F013	C3	F028	C3	F040	C3	F052	C3	F073	A4	F089	B2	F103	D3

F104	D5	F110	D5	F120	D4	F134	D5	F148	D6	F159	D5	F255	A7
F104	D5	F110	D5	F120	D4	F134	D5	F148	D6	F159	D5	F257	A7
F105	D3	F111	D3	F121	D4	F135	D5	F153	D6	F160	D5	F258	A6
F105	D3	F111	D3	F121	D4	F135	D5	F153	D6	F160	D5	F259	A4
F106	D3	F113	D3	F127	D4	F137	D5	F154	D5	F161	D3	F260	B7
F106	D3	F113	D3	F127	D4	F137	D5	F154	D5	F161	D3	F300	B2
F107	D2	F115	D3	F128	D4	F141	D5	F156	D6	F191	D5	F301	C3
F107	D2	F115	D3	F128	D4	F141	D5	F156	D6	F191	D5	F302	D2
F108	D5	F117	D4	F129	D5	F143	D6	F157	D5	F251	A7	F303	D2
F108	D5	F117	D4	F129	D5	F143	D6	F157	D5	F252	A7	F305	C2
F109	D3	F119	D4	F133	D4	F147	D6	F158	D5	F253	A7	F306	C2
F109	D3	F119	D4	F133	D4	F147	D6	F158	D5	F254	A7	F306	C2

F307	C2	F401	C5	F413	B7	F434	A5	F486	B5	F540	A5	F605	C5
F308	D1	F402	A5	F414	B7	F436	A5	F501	B7	F541	A5	F606	C5
F309	B3	F403	A5	F415	B7	F437	A5	F530	A4	F580	A3	F607	C5
F310	C3	F404	A5	F416	B7	F447	B5	F531	B5	F584	B3	F608	C5
F311	C2	F405	A5	F417	B5	F451	B5	F532	B5	F585	A3	F612	C5
F313	D2	F406	A5	F418	B7	F461	B6	F533	B5	F586	A3	F613	C5
F314	D2	F407	A5	F419	A6	F463	B5	F534	B4	F587	B3	F614	C5
F315	D2	F408	A5	F420	C1	F465	C5	F535	B5	F588	B3	F615	C5
F316	C2	F409	A5	F421	C1	F466	C5	F536	A5	F590	A2	F616	C5
F316	C2	F410	A5	F422	B4	F470	B5	F537	A5	F602	C5	F620	C5
F318	C3	F411	B7	F423	B4	F478	B6	F538	A5	F603	C5	F624	B4
F319	B2	F412	B7	F424	B4	F482	A5	F539	A5	F604	C5	F625	C4

F626	C4	F685	D7	F702	A2	F718	B2	F801	C6
F680	D7	F686	D7	F705	A1	F719	B2	F802	C7
F680	D7	F686	D7	F706	A1	F720	B2	F803	C6
F681	D7	F687	D7	F707	A1	F721	A1	F804	C7
F681	D7	F687	D7	F708	A1	F722	A2	F805	C6
F682	D7	F688	D7	F710	C3	F723	A2	F806	B5
F682	D7	F688	D7	F711	A1	F724	A2	F807	B5
F683	D7	F689	D7	F712	A1	F725	A2	F808	C6
F683	D7	F689	D7	F713	A1	F726	A3	F809	C7
F684	D7	F690	D7	F714	A1	F727	A3	F810	C6
F684	D7	F690	D7	F716	B2	F728	A3	F811	B6
F685	D7	F701	B2	F717	B3	F729	A2	F820	C7

F821	C7	I112	D3	I456	B5	I827	C6
F822	C6	I114	D3	I457	A5	I828	C6
F823	C6	I114	D3	I458	A5	I834	C6
F824	C7	I116	D4	I459	B5	I836	C6
F826	B6	I116	D4	I460	A5	I838	C6
F827	C6	I118	D4	I502	A7	I840	C6
F870	A5	I118	D4	I503	B7	I841	C6
F871	A5	I119	D4	I607	C5	I842	C6
F872	A6	I119	D4	I608	C5	I844	B6
F873	A5	I120	D4	I618	C5	I847	C6
F874	A5	I120	D4	I619	C5	I848	C6
F912	A3	I126	D5	I620	C5	I860	A3
F913	A4	I126	D5	I621	C5	I861	A3
F915	A3	I128	D4	I622	C5	I862	A3
F954	A5	I128	D4	I623	C5	I863	A3
F955	A6	I132	D4	I624	C5	I864	A3
F988	B5	I132	D4	I625	C5	I865	A3
I001	B4	I136	D5	I626	C5	I866	A3
I002	B2	I136	D5	I627	C5	I867	A5
I003	B2	I139	D5	I628	C5	I868	A3
I005	B3	I139	D5	I629	C5	I869	A3
I006	B3	I140	D5	I630	C5	I870	A4
I007	B3	I140	D5	I631	C5	I871	A4
I008	B4	I142	D5	I632	C5	I872	A5
I009	B2	I142	D5	I633	C5	I901	A4
I010	B2	I150	D3	I634	C5	I902	A4
I011	B3	I150	D3	I635	C5	I903	A3
I012	C2	I251	A7	I636	C5	I904	A3
I013	B4	I252	A7	I637	C5	I905	A3
I015	C1	I253	A7	I638	C5	I906	A3
I016	B4	I254	A7	I639	C5	I907	A3
I018	B2	I255	A7	I680	D6	I908	A3
I019	B3	I256	C7	I680	D6	I951	A6
I020	B2	I257	C7	I681	D7	I952	A6
I022	B3	I258	C7	I681	D7	I953	A6
I023	B4	I259	C7	I682	D7	I954	A6
I024	B4	I260	B7	I683	D6	I955	A7
I025	C3	I261	A7	I684	C6	I956	A5
I026	C3	I262	A7	I685	D6	I957	A5
I028	C3	I263	A7	I690	D6	I959	A6
I030	B3	I264	A7	I690	D6	I960	A6
I032	C3	I304	D1	I699	D6	I961	A5
I033	C3	I313	C2	I699	D6	I962	A6
I034	C3	I317	C3	I700	D6	I963	A5
I036	B4	I318	C2	I700	D6	I964	A6
I037	C3	I319	C2	I701	C2	I992	A7
I039	B4	I320	C2	I701	D6	I995	B6
I042	B4	I321	C2	I702	B2	I996	B7
I044	B4	I322	C2	I702	D6		
I051	C4	I324	C2	I703	A2		
I052	C4	I325	C2	I704	B2		
I054	B4	I348	A3	I705	B2		
I055	C4	I349	A3	I706	B2		
I056	C4	I350	A3	I707	B2		
I057	B4	I351	A3	I709	A2		
I058	B4	I352	A3	I710	C2		
I059	C3	I353	A4	I711	C2		
I060	B2	I354	A3	I712	A2		
I061	B4	I355	A3	I713	B2		
I063	C3	I356	A4	I714	C2		
I064	B3	I357	A4	I715	C2		
I065	B3	I358	A4	I716	C2		
I067	B3	I359	A4	I717	C2		
I068	B3	I360	C1	I718	A2		
I069	C4	I361	A3	I719	A2		
I071	B4	I371	C3	I721	B2		
I072	B4	I386	B4	I722	D6		
I073	C3	I387	B4	I723	D6		
I074	C3	I388	B3	I724	B2		
I075	D1	I423	B5	I725	A2		
I076	B4	I424	B5	I726	B1		
I078	C3	I425	B5	I727	B2		
I079	B4	I426	B5	I728	C1		
I080	B4	I427	B6	I729	A2		
I081	C4	I428	B6	I730	B3		
I082	C4	I429	B6	I731	A3		
I086	C1	I436	B6	I735	A1		
I087	C1	I437	A4	I736	A1		
I088	C1	I438	B5	I737	A1		
I089	C1	I439	B5	I738	A1		
I090	C1	I440	B5	I739	C2		
I091	D1	I441	B5	I740	B2		
I092	D1	I442	B5	I741	B2		
I093	D1	I443	B5	I742	B2		
I094	C1	I444	B6	I802	C7		
I102	D3	I445	B6	I803	C7		
I102	D3	I446	B5	I815	C6		
I104	D3	I449	B5	I816	C6		
I104	D3	I450	B5	I819	C6		
I106	D3	I451	B5	I822	C7		
I106	D3	I452	B5	I823	C7		
I110	D2	I453	B5	I824	C6		
I110	D2	I454	A5	I825	C6		
I112	D3	I455	A5	I826	C7		

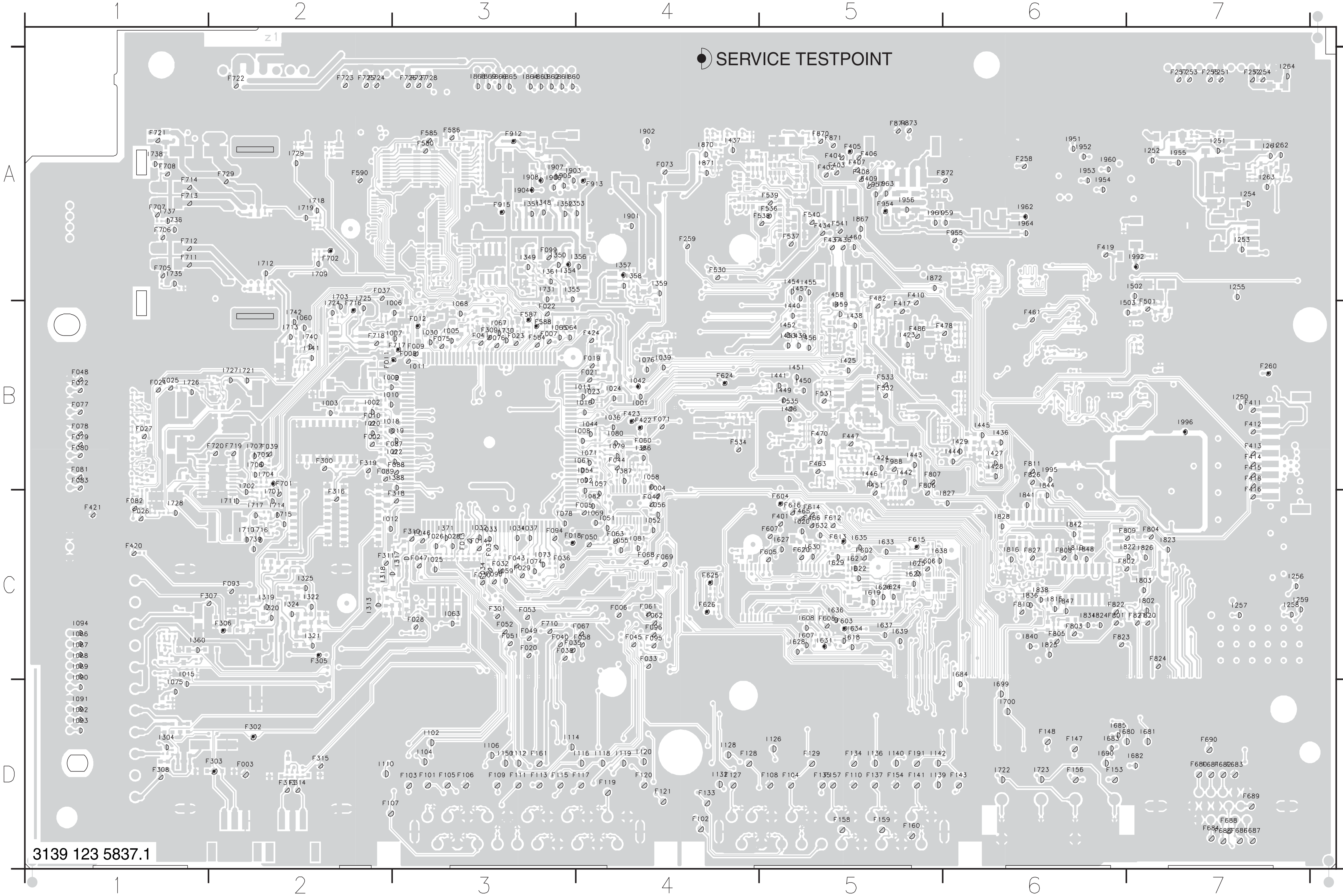

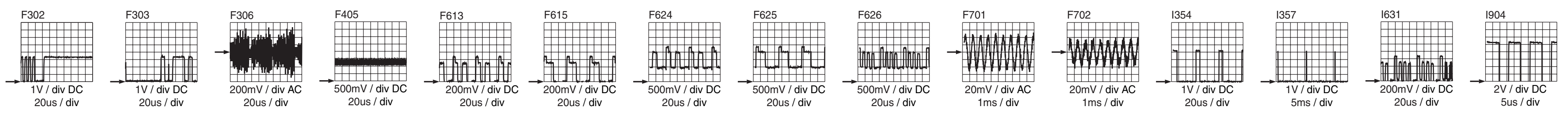

F011	1V9	F913	8V
F012	1V9	F958	11V6
F903	11V9	F960	11V4
F905	3V3	F954	5V4
F906	11V6	F992	2V5
F915	5V3	F996	1V8
F912	33V7		

E_14710_036.eps
020904

I2C IC Overview

I2C BUS INTERCONNECTION DIAGRAM

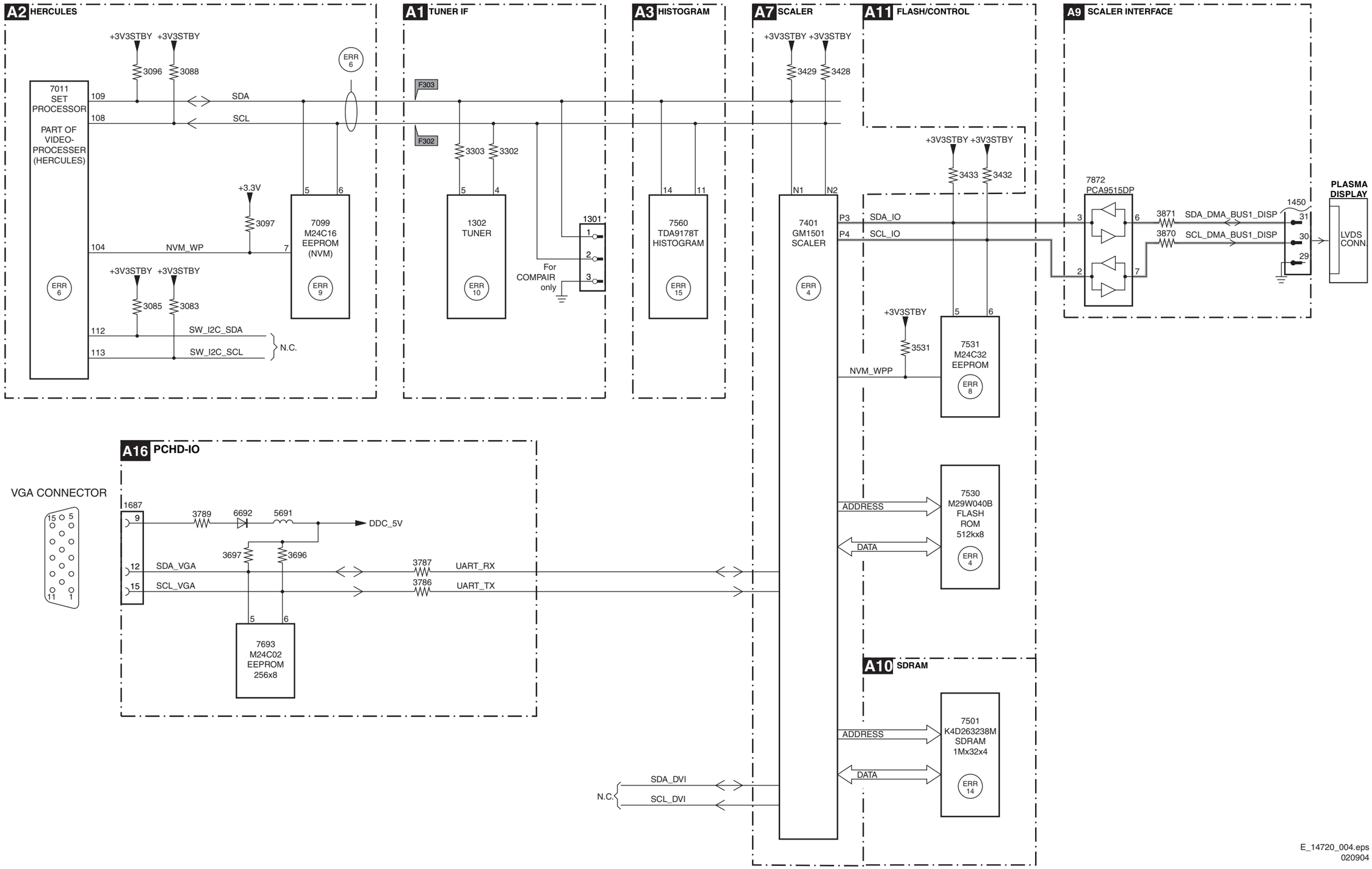

E_14720_004.eps
020904

Supply Voltage Overview

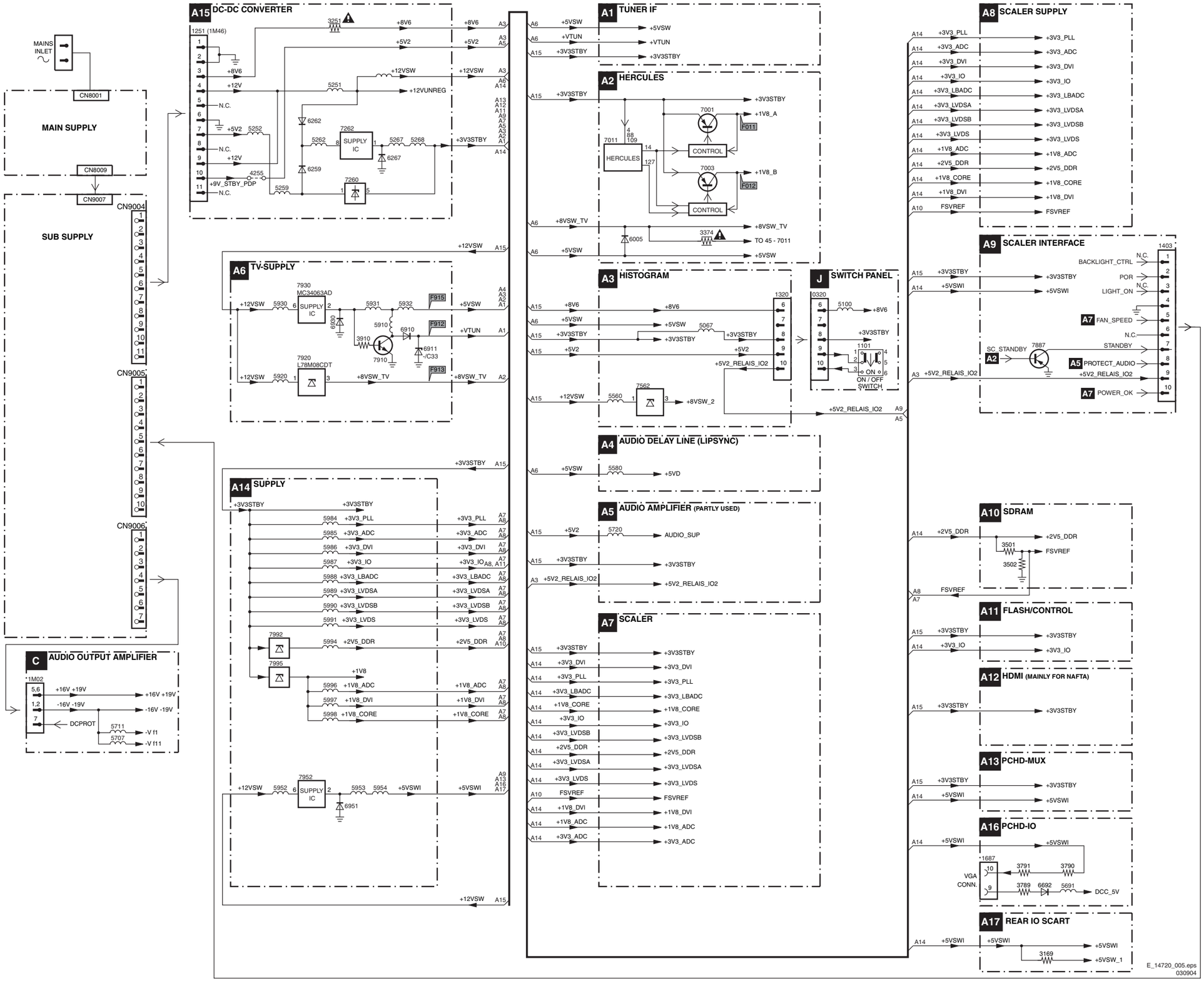

7. Circuit Diagrams and PWB Layouts

Small Signal Board: Tuner and VIF

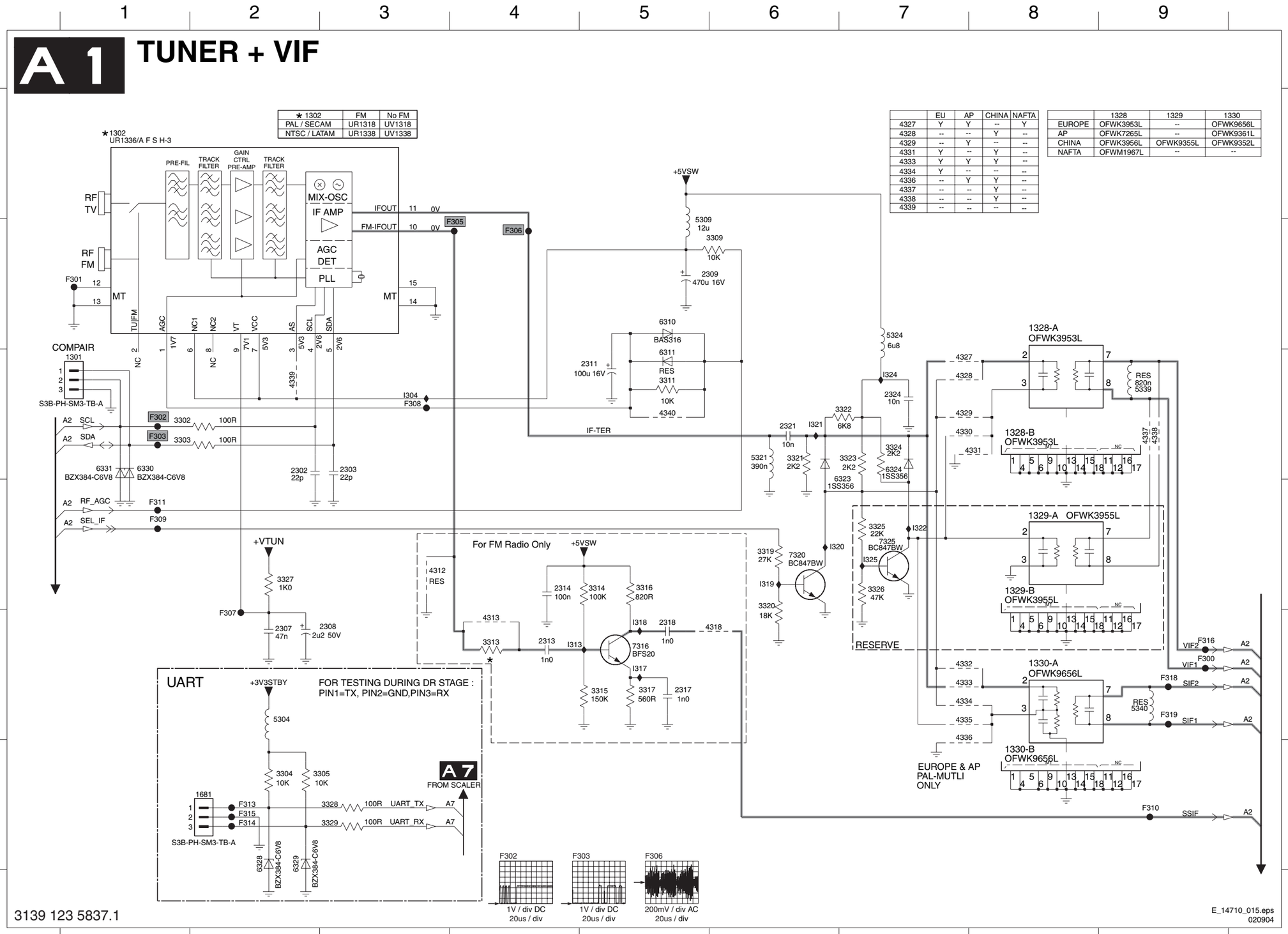

* 1302	FM	No FM
PAL / SECAM	UR1318	UV1318
NTSC / LATAM	UR1338	UV1338

	EU	AP	CHINA	NAFTA
4327	Y	Y	--	Y
4328	--	--	Y	--
4329	--	Y	--	--
4331	Y	--	Y	--
4333	Y	Y	Y	--
4334	Y	--	--	--
4336	--	Y	Y	--
4337	--	--	Y	--
4338	--	--	Y	--
4339	--	--	--	--

	1328	1329	1330
EUROPE	OFWK3953L	--	OFWK9656L
AP	OFWK7265L	--	OFWK9361L
CHINA	OFWK3956L	OFWK9355L	OFWK9352L
NAFTA	OFWM1967L	--	--

1301 C1
1302 A1
1328-A B8
1328-B C8
1329-A D8
1329-B D8
1330-A E8
1330-B F8
1681 F2
2302 C2
2303 C3
2307 E2
2308 E3
2309 B6
2311 C5
2313 E4
2314 D4
2317 E5
2318 E5
2321 C6
2324 C7
3302 C1
3303 C1
3304 F2
3305 F3
3309 B6
3311 C5
3313 E4
3314 D5
3315 E5
3316 D5
3317 E5
3319 D6
3320 D6
3321 C6
3322 C7
3323 C7
3324 C7
3325 D7
3326 D7
3327 D2
3328 F3
3329 F3
4312 D3
4313 E4
4318 E6
4327 C7
4328 C7
4329 C7
4330 C7
4331 C8
4332 E7
4333 E7
4334 E7
4335 E7
4336 E7
4337 C9
4338 C9
4339 C2
4340 C5
5304 E2
5309 B5
5321 C6
5324 B7
5339 C9
5340 E9
6310 B5
6311 C5
6323 D7
6324 C7
6328 F2
6329 F2
6330 C1
6331 C1
7316 E5
7320 D6
7325 D7
F300 E9
F301 B1
F302 C1
F303 C1
F305 B4
F306 B4
F307 E2
F308 C3
F309 D1
F310 F9
F311 D1
F313 F2
F314 F2
F315 F2
F316 E9
F318 E9
F319 E9
I304 C3
I313 E4
I317 E5
I318 E5
I319 D6
I320 D6
I321 C6
I322 C7
I324 C7
I325 D7

Small Signal Board: Histogram and Hercules

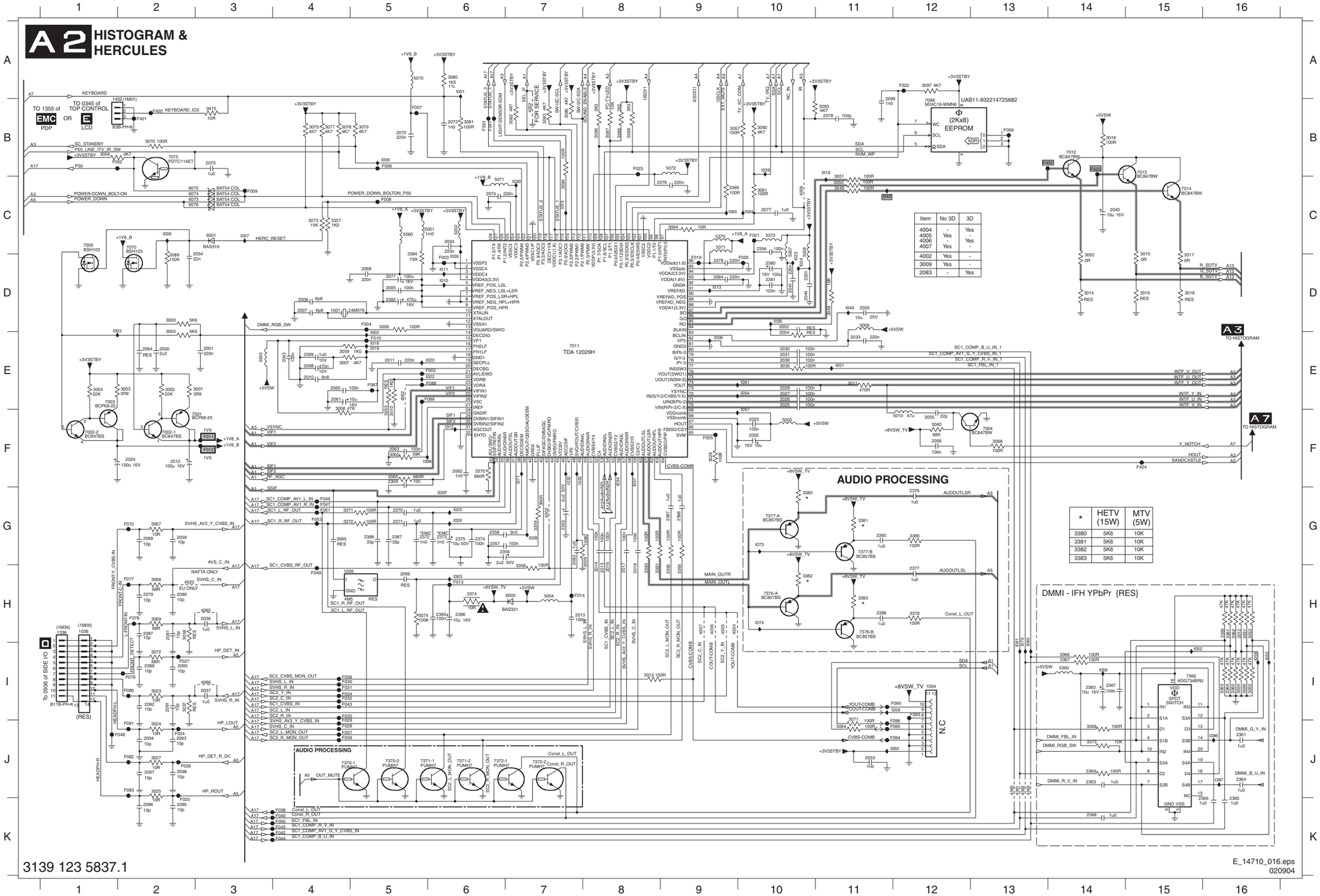

Item	No 3D	3D
4004	-	Yes
4005	Yes	-
4006	-	Yes
4007	Yes	-
4002	Yes	-
3009	Yes	-
2083	-	Yes

*	HETV (15W)	MTV (5W)
3380	5K6	10K
3381	5K6	10K
3382	5K6	10K
3383	5K6	10K

1001 D4
1004 I12
1009 H4
1036 H1
1336 H1
1402 B1
2000 E2
2001 E3
2002 F10
2004 C6
2005 D5
2006 D4
2007 D4
2008 E4
2009 E4
2010 E4
2011 E5
2012 F3
2013 H7
2014 H8
2015 H8
2016 H8
2017 H8
2018 H8
2023 F10
2024 F2
2025 E10
2026 E10
2027 E10
2029 E10
2030 E10
2031 E10
2032 E10
2033 E11
2035 D11
2036 H3
2037 I3
2040 C14
2041 D10
2043 E4
2044 D10
2052 D10
2053 J11
2054 C3
2055 F12
2056 F12
2059 G2
2060 E4
2061 E4
2063 F5
2064 E2
2065 G4
2066 H5
2068 D5
2069 G2
2070 B3
2071 D5
2072 B5
2073 B6
2074 C6
2076 C9
2077 C10
2078 B11
2079 H2
2080 H2
2081 H2
2082 F6
2083 G7
2084 D9
2087 H2
2088 I2
2090 I2
2091 I2
2092 I2
2093 J2
2094 J2
2095 K2
2096 K2
2097 J2
2098 J2
2099 A11
2355 G7
2356 G6
2357 G6
2358 G6
2359 F5
2360 I14
2361 J16
2362 J16
2364 J16
2365 J16
2366 J16
2367 I14
2368 K14
2370 G5
2371 G5
2372 G5
2373 G6
2374 G6
2375 G6
2376 G12
2377 H12
2378 D9
2380 D10
2381 D10
2382 D5
2386 H11
2387 G5
2388 G5
2392 G11
2394 C10
2395 H6
2396 H6
2397 G9
2398 G9
3000 D2
3001 E3
3002 E2
3003 E2
3004 E1
3005 D2
3006 D5
3007 E4
3008 F4
3009 G8
3010 F5
3011 E11
3012 H16
3013 I8
3014 D14
3015 C15
3016 D15
3017 C15
3018 D15
3019 B14
3023 I2
3024 J2
3025 J2
3027 J2
3028 F9
3031 H16
3033 H16
3034 I16
3035 E10
3036 I16
3037 I2
3038 H2
3040 F12
3048 D11
3049 C11
3050 C11
3051 C11
3052 C14
3053 F5
3054 E10
3055 I16
3056 B1
3057 B9
3059 E4
3060 F5
3064 J11
3065 F5
3067 G2
3068 H2
3069 H2
3070 B2
3071 J11
3072 I2
3073 C4
3074 H5
3075 B4
3077 B4
3078 B4
3079 B5
3080 A6
3081 B6
3082 B7
3083 B7
3084 C7
3085 B7
3086 B8
3087 B8
3088 B8
3089 D2
3091 C10
3092 B10
3093 B11
3094 C9
3096 B8
3097 A12
3098 F13
3357 C4
3358 H7
3359 G7
3360 H16
3361 H16
3362 H16
3363 I16
3364 I16
3365 I16
3366 I14
3367 I14
3368 J14
3369 J14
3370 F6
3371 G4
3372 G4
3373 J14
3374 H6
3378 H12
3380 G10
3381 G11
3382 H10
3383 H11
3386 G12
3389 C9
3390 H8
3391 H8
3392 H9
3393 H9
3394 C5
3415 B3
4002 G7
4004 H9
4005 H9
4006 H9
4007 H9
4008 C10
4022 B7
4023 H2
4062 E5
4085 H3
4086 I3
4360 J13
4361 J13
4362 J13
4363 J13
5001 C6
5003 E3
5004 H7
5005 F10
5006 D11
5007 C10
5008 C10
5010 F12
5060 C5
5070 A5
5071 C6
5072 B9
5360 I14
5370 C9
5371 C9
5372 C10
6001 C3
6005 H7
6073 C2
6074 C2
6075 C2
6076 C2
7001 F2
7002-1 F2
7002-2 F1
7003 E1
7004 F13
7005 C1
7011 E7
7012 B14
7013 B15
7014 C15
7070 C2
7075 B2
7099 B12
7360 I15
7370-1 J4
7370-2 J5
7371-1 J5
7371-2 J6
7372-1 J6
7372-2 J7
7376-A H10
7376-B H11
7377-A G10
7377-B G11
F002 E6
F003 D6
F004 D5
F005 F9
F006 B5
F007 B5
F008 C5
F009 C3
F010 E5
F011 F3
F012 F3
F013 H6
F014 H7
F019 D9
F020 D10
F021 C10
F022 A12
F023 B8
F024 J2
F025 K2
F026 J2
F027 I2
F028 J4
F029 J4
F030 I4
F031 I4
F032 I4
F033 B6
F034 I4
F035 I4
F036 I4
F037 J4
F038 K4
F039 J4
F040 K4
F041 B6
F042 K4
F043 I4
F044 K4
F045 K4
F046 G4
F047 G4
F048 J2
F049 H4
F050 K4
F051 G4
F052 B1
F053 G4
F072 G2
F077 H2
F078 H2
F079 I2
F080 I2
F081 J2
F082 J2
F083 J2
F087 E5
F088 E6
F089 E6
F090 I12
F093 I12
F094 J12
F095 J12
F096 J12
F099 B13
F420 B2
F421 B2
F422 B14
F423 B14
F424 F15
I001 A6
I002 E5
I003 D1
I005 B5
I006 C2
I007 C3
I008 E9
I009 D6
I010 D6
I011 D6
I012 F6
I013 D9
I015 C7
I016 B11
I018 E5
I019 E5
I020 E6
I022 E6
I023 D10
I024 D10
I025 G6
I026 G6
I028 G7
I030 C7
I032 F7
I033 F7
I034 F8
I036 D10
I037 F8
I039 B10
I042 C11
I044 D11
I051 E11
I052 I15
I054 E10
I061 E10
I063 H6
I064 C10
I065 C9
I073 G10
I074 H10
I079 H13
I080 H13
I081 I13
I371 F7
I386 J16
I387 J16
I388 F5

Small Signal Board: Histogram and Hercules

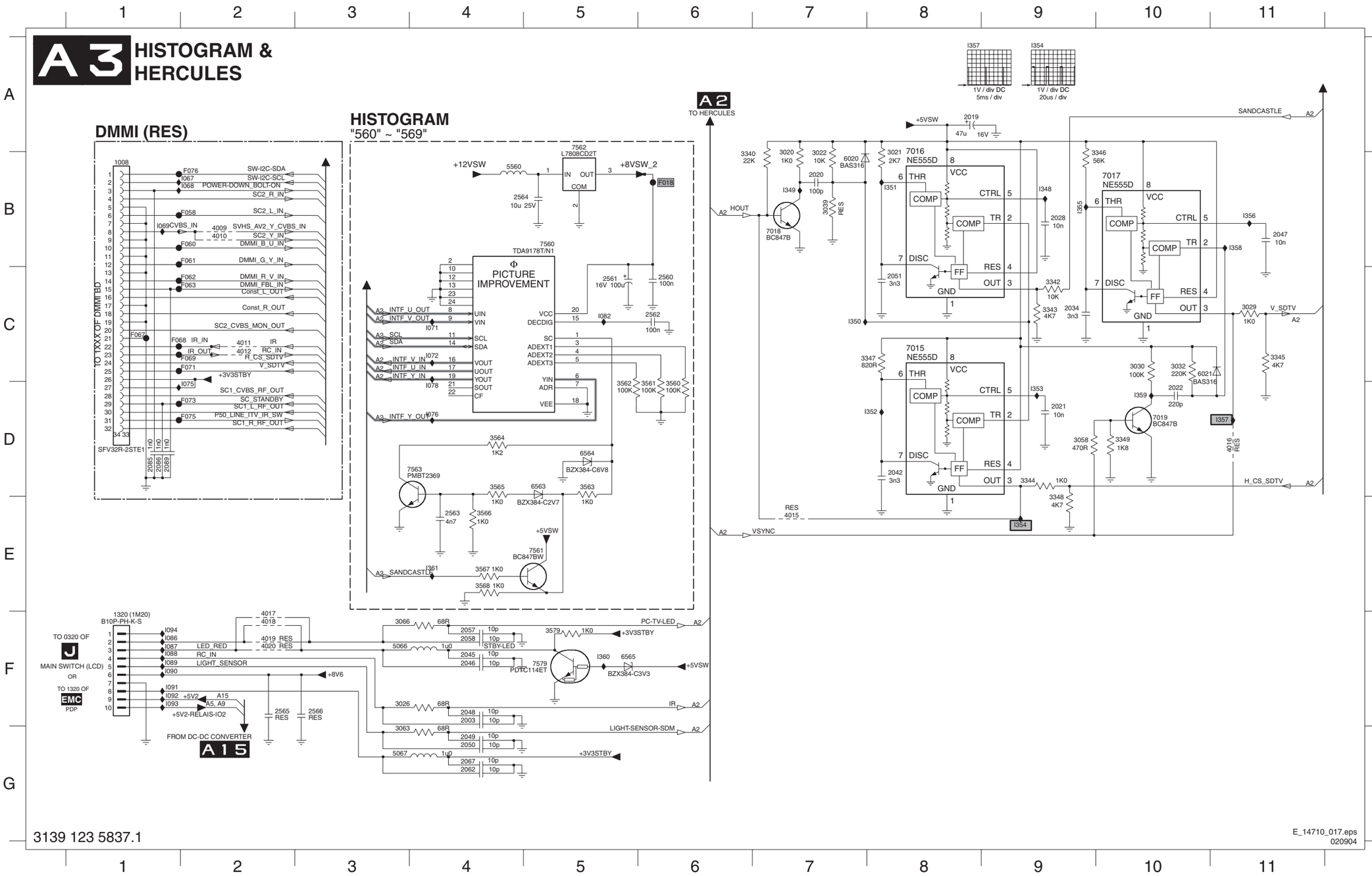

1008 B1
1320 F1
2003 F4
2019 A8
2020 B7
2021 D9
2022 D10
2028 B9
2034 C9
2042 D8
2045 F4
2046 F4
2047 B11
2048 F4
2049 G4
2050 G4
2051 C8
2057 F4
2058 F4
2062 G4
2067 G4
2085 D1
2086 D1
2089 D1
2560 C6
2561 C5
2562 C6
2563 E4
2564 B4
2565 F2
2566 F3
3020 A7
3021 A8
3022 A7
3026 F3
3029 C11
3030 C10
3032 C10
3039 B7
3058 D9
3063 G3
3066 F3
3340 A6
3342 C9
3343 C9
3344 D9
3345 C11
3346 A10
3347 C8
3348 D9
3349 D10
3560 C6
3561 C6
3562 C5
3563 D5
3564 D4
3565 D4
3566 E4
3567 E4
3568 E4
3579 F5
4009 B2
4010 B2
4011 C2
4012 C2
4015 E7
4016 D11
4017 F2
4018 F2
4019 F2
4020 F2
5066 F3
5067 G3
5560 B4
6020 B7
6021 C10
6563 D5
6564 D5
6565 F5
7015 C8
7016 B8
7017 B10
7018 B7
7019 D10
7560 B5
7561 E5
7562 A5
7563 D3
7579 F5
F018 B6
F058 B2
F060 B2
F061 B2
F062 C2
F063 C2
F067 C1
F068 C1
F069 C2
F071 C2
F073 D2
F075 D2
F076 B2
I067 B2
I068 B2
I069 B1
I071 C4
I072 C4
I075 D2
I076 D4
I078 D4
I082 C5
I086 F1
I087 F1
I088 F1
I089 F1
I090 F1
I091 F1
I092 F1
I093 F1
I094 F1
I348 B9
I349 B7
I350 C7
I351 B8
I352 D8
I353 D9
I354 E9
I355 B9
I356 B11
I357 D11
I358 B11
I359 D10
I360 F5
I361 E4

Small Signal Board: Audio Delay line (LIPSYNC)

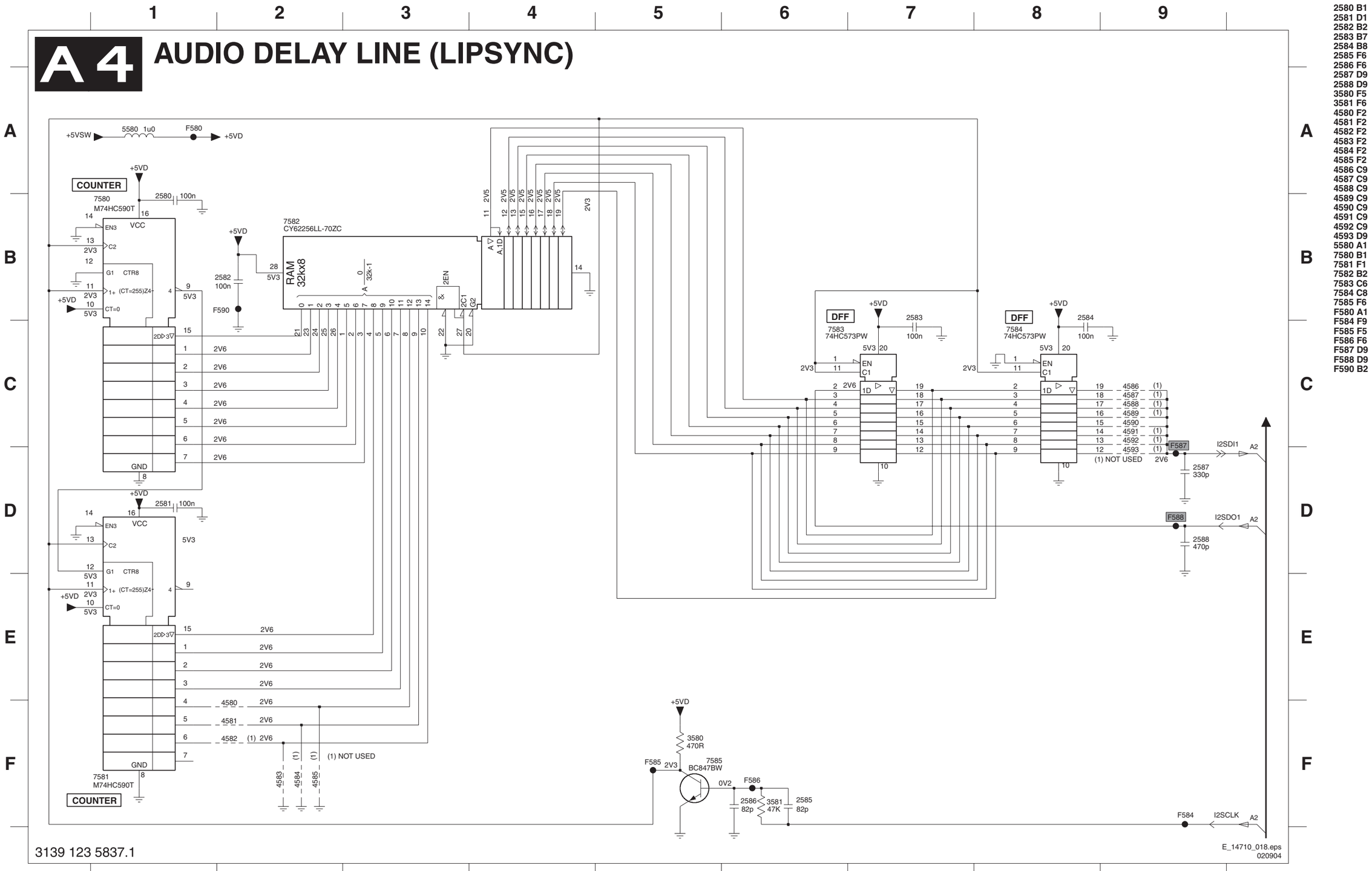

2580 B1
2581 D1
2582 B2
2583 B7
2584 B8
2585 F6
2586 F6
2587 D9
2588 D9
3580 F5
3581 F6
4580 F2
4581 F2
4582 F2
4583 F2
4584 F2
4585 F2
4586 C9
4587 C9
4588 C9
4589 C9
4590 C9
4591 C9
4592 C9
4593 D9
5580 A1
7580 B1
7581 F1
7582 B2
7583 C6
7584 C8
7585 F6
F580 A1
F584 F9
F585 F5
F586 F6
F587 D9
F588 D9
F590 B2

Small Signal Board: Audio Amplifier

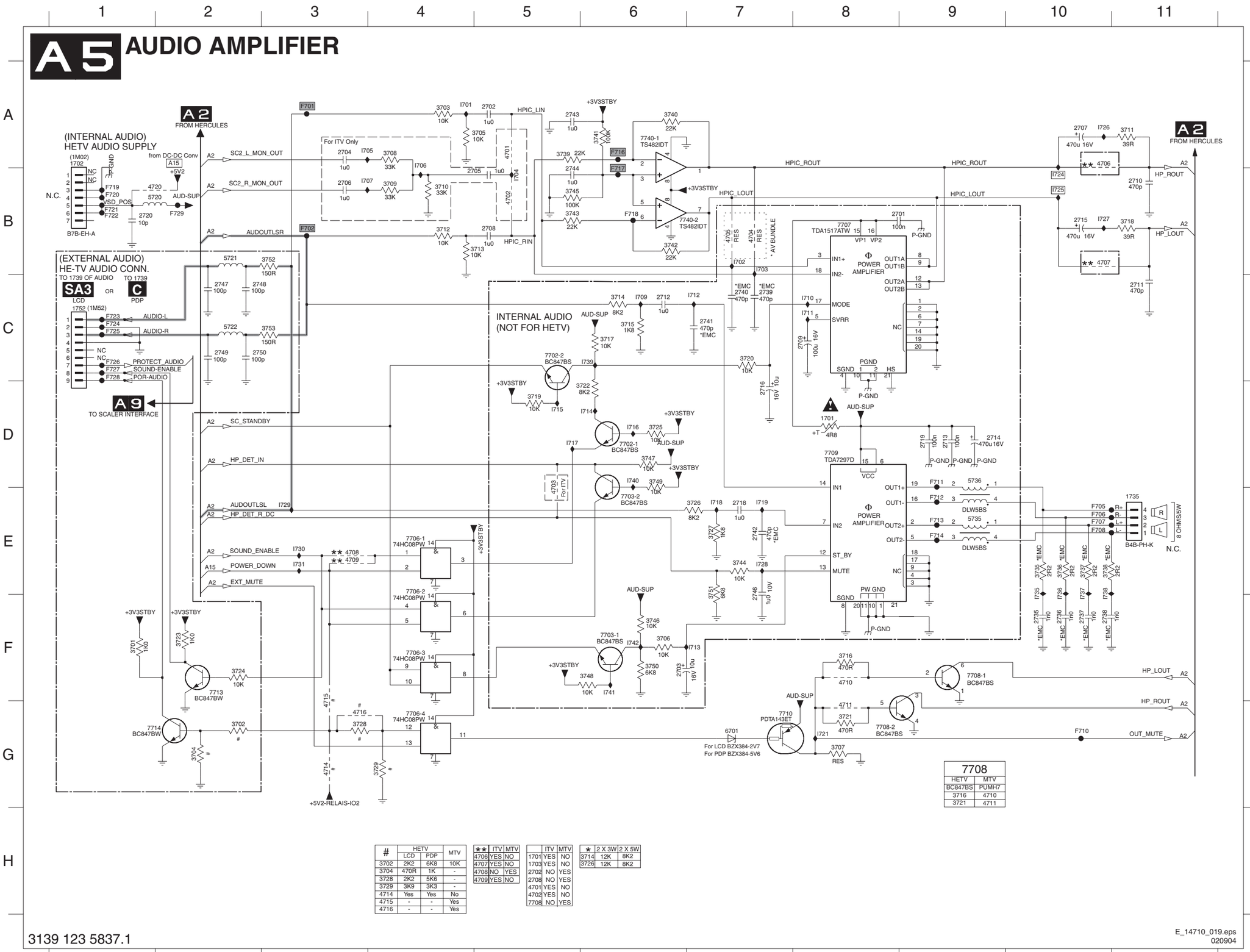

#	HETV LCD	HETV PDP	MTV
3702	2K2	6K8	10K
3704	470R	1K	-
3728	2K2	5K6	-
3729	3K9	3K3	-
4714	Yes	Yes	No
4715	-	-	Yes
4716	-	-	Yes

**	ITV	MTV
4706	YES	NO
4707	YES	NO
4708	NO	YES
4709	YES	NO

	ITV	MTV
1701	YES	NO
1703	YES	NO
2702	NO	YES
2708	NO	YES
4701	YES	NO
4702	YES	NO
7708	NO	YES

*	2 X 3W	2 X 5W
3714	12K	8K2
3726	12K	8K2

3139 123 5837.1

E_14710_019.eps
020904

Small Signal Board: TV Supply

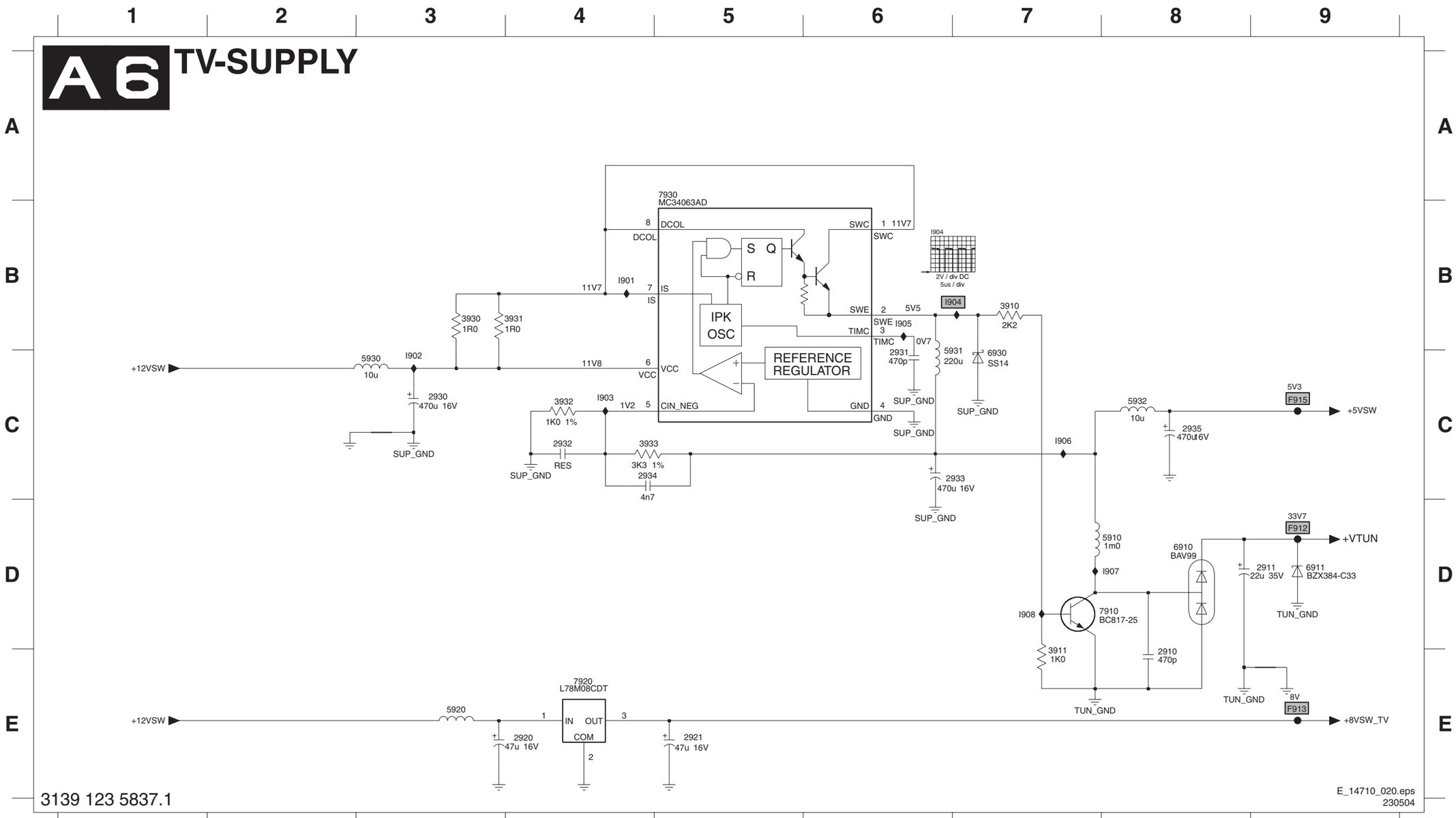

2910 D8
2911 D9
2920 E4
2921 E5
2930 C3
2931 B6
2932 C4
2933 C7
2934 C4
2935 C8
3910 B7
3911 D7
3930 B3
3931 B4
3932 C4
3933 C4
5910 D8
5920 E3
5930 C3
5931 B7
5932 C8
6910 D8
6911 D9
6930 C7
7910 D7
7920 E4
7930 A5
F912 D9
F913 E9
F915 C9
I901 B4
I902 C3
I903 C4
I904 B7
I905 B6
I906 C7
I907 D8
I908 D7

Small Signal Board: Scaler

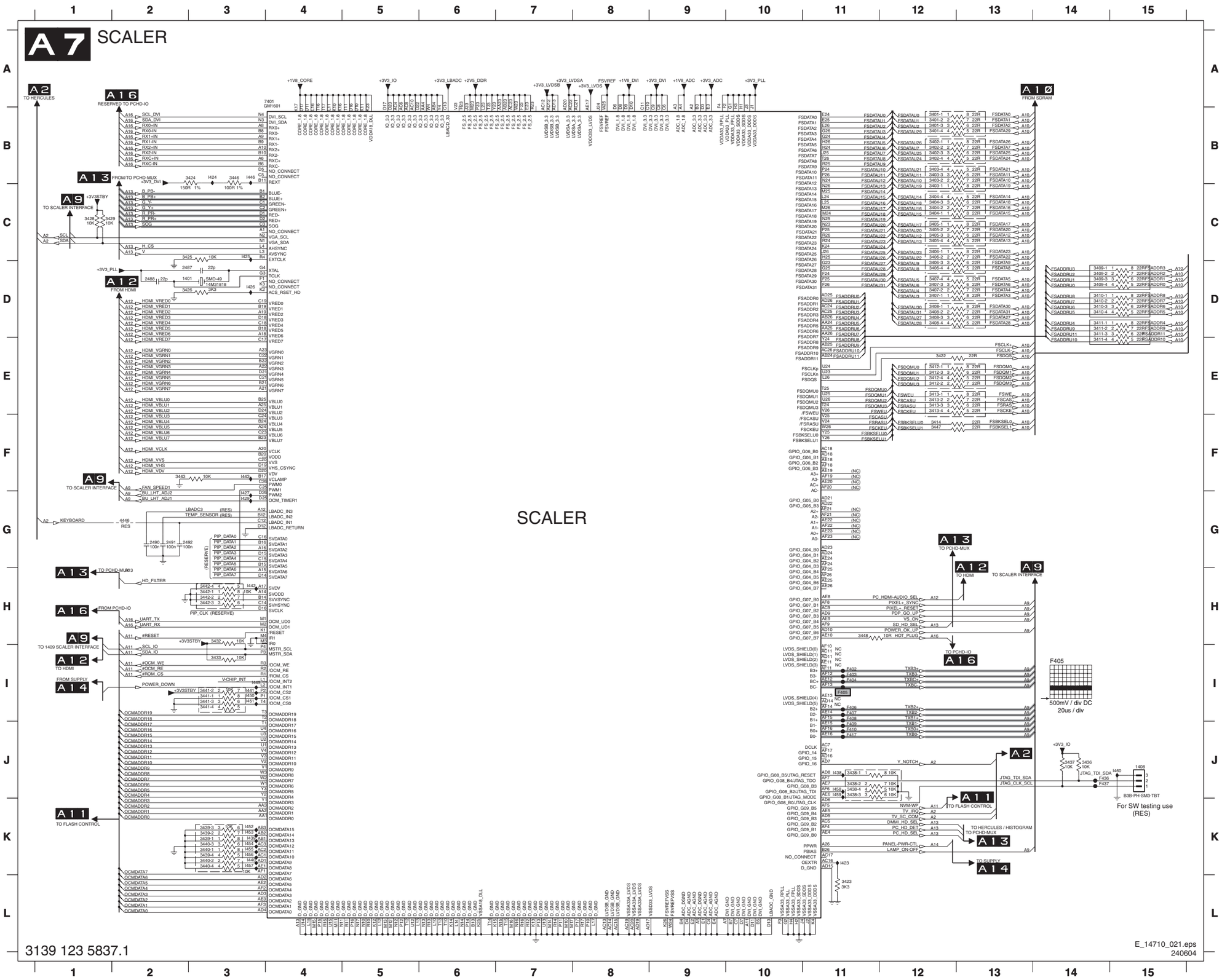

Small Signal Board: Scaler Supply

2401 C1	2405 C2	2409 C3	2413 C4	2417 B1	2421 B2	2425 B3	2429 B4	2433 B5	2437 B4	2441 B5	2445 B6	2449 C6	2453 B3	2461 C6	2465 B1	2469 B2	2473 B6	2477 B7	2481 B8	2485 A9	F401 C1	F451 A2	F466 B1	F486 A7
2402 C1	2406 C2	2410 C3	2414 C4	2418 B1	2422 B2	2426 B3	2430 B4	2434 B4	2438 B5	2442 B6	2446 A6	2450 C6	2454 B3	2462 C7	2466 B1	2470 B5	2474 B6	2478 A7	2482 B8	2486 A7	F419 B1	F461 C6	F470 B5	
2403 C1	2407 C2	2411 C3	2415 C4	2419 B2	2423 B3	2427 B3	2431 B4	2435 B4	2439 B5	2443 B6	2447 C5	2451 B2	2455 B3	2463 C5	2467 B1	2471 B6	2475 B6	2479 B8	2483 B9	2495 B7	F434 A4	F463 C5	F478 A7	
2404 C2	2408 C3	2412 C3	2416 C4	2420 B2	2424 B3	2428 B4	2432 B4	2436 B4	2440 B5	2444 B6	2448 C5	2452 B3	2456 A3	2464 C5	2468 B2	2472 B6	2476 B7	2480 B8	2484 B9	2496 B8	F447 C5	F465 A1	F482 A9	

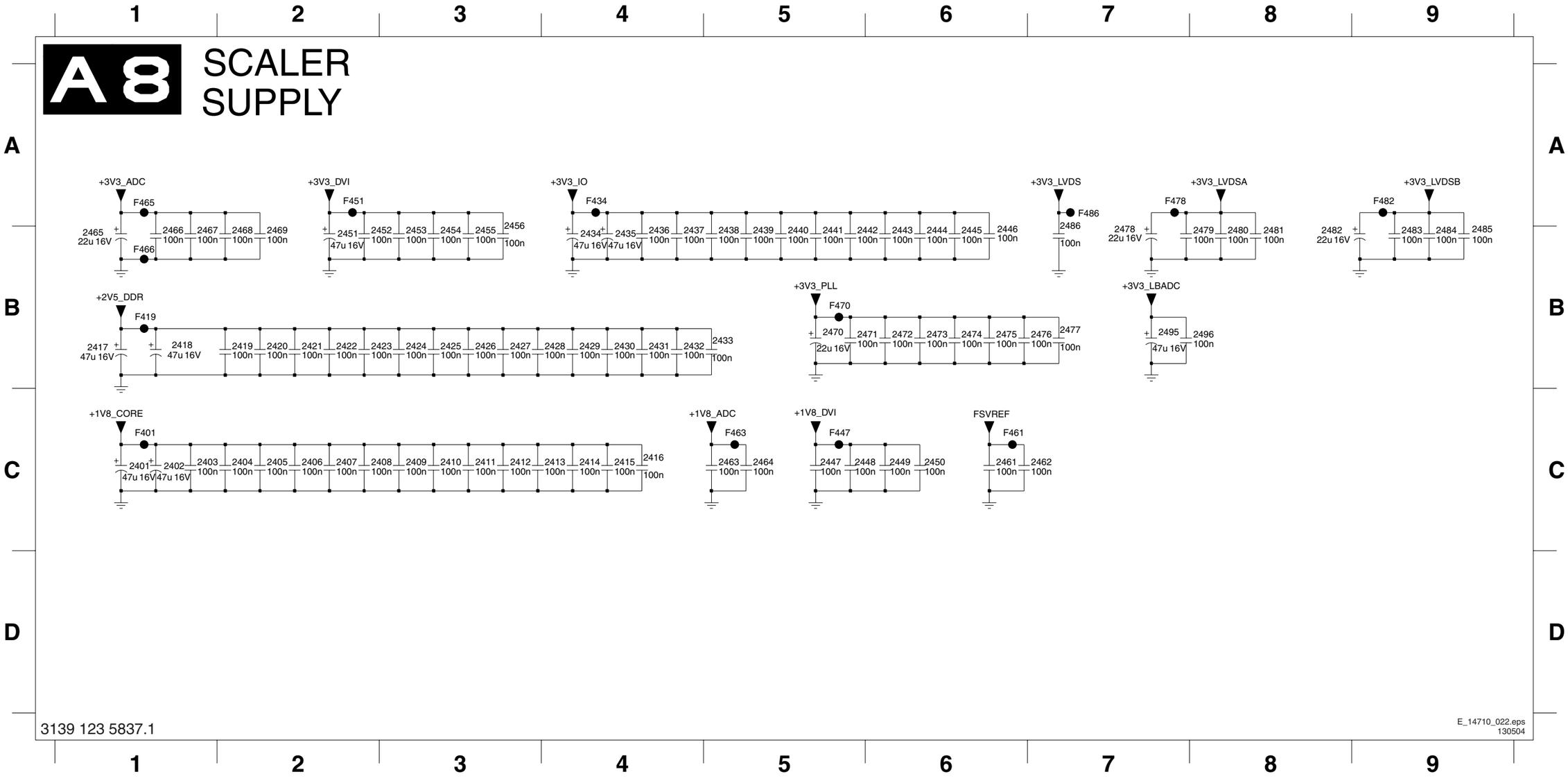

Small Signal Board: Scaler Interface

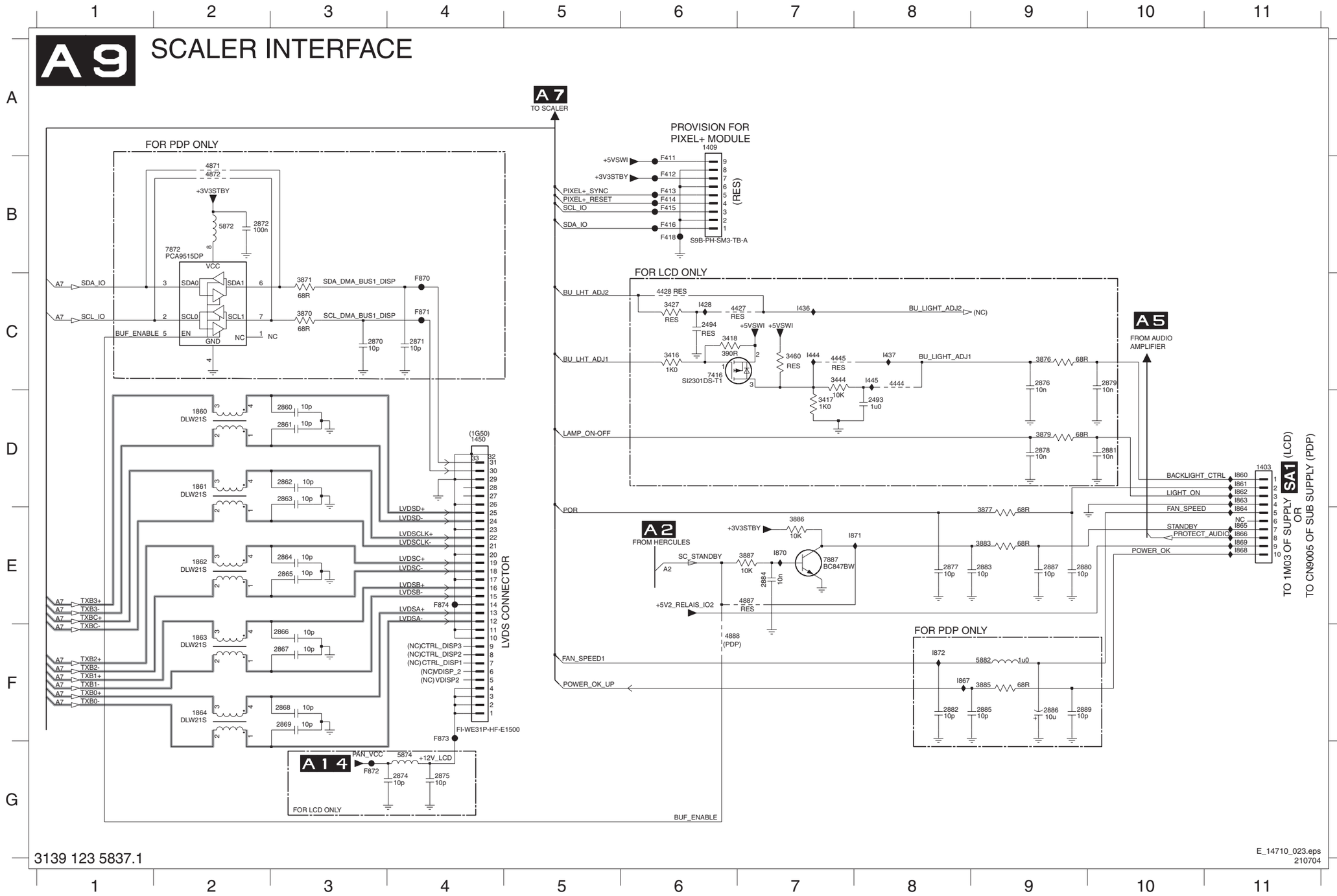

3139 123 5837.1

1403 D11 I862 D11
1409 A6 I863 D11
1450 D4 I864 E11
1860 D2 I865 E11
1861 D2 I866 E11
1862 E2 I867 F8
1863 F2 I868 E11
1864 F2 I869 E11
2493 D8 I870 E7
2494 C6 I871 E8
2860 D3 I872 F8
2861 D3
2862 D3
2863 D3
2864 E3
2865 E3
2866 F3
2867 F3
2868 F3
2869 F3
2870 C3
2871 C4
2872 B2
2874 G4
2875 G4
2876 C9
2877 E8
2878 D9
2879 C10
2880 E9
2881 D10
2882 F8
2883 E9
2884 E7
2885 F9
2886 F9
2887 E9
2889 F9
3416 C6
3417 D7
3418 C6
3427 C6
3444 C7
3460 C7
3870 C3
3871 C3
3876 C9
3877 E9
3879 D9
3883 E9
3885 F9
3886 E7
3887 E7
4427 C7
4428 C6
4444 C8
4445 C7
4871 B2
4872 B2
4887 E7
4888 F6
5872 B2
5874 G4
5882 F9
7416 C6
7872 B2
7887 E7
F411 B6
F412 B6
F413 B6
F414 B6
F415 B6
F416 B6
F418 B6
F870 C4
F871 C4
F872 G3
F873 F4
F874 E4
I428 C6
I436 C7
I437 C8
I444 C7
I445 C8
I860 D11
I861 D11

Small Signal Board: SDRAM

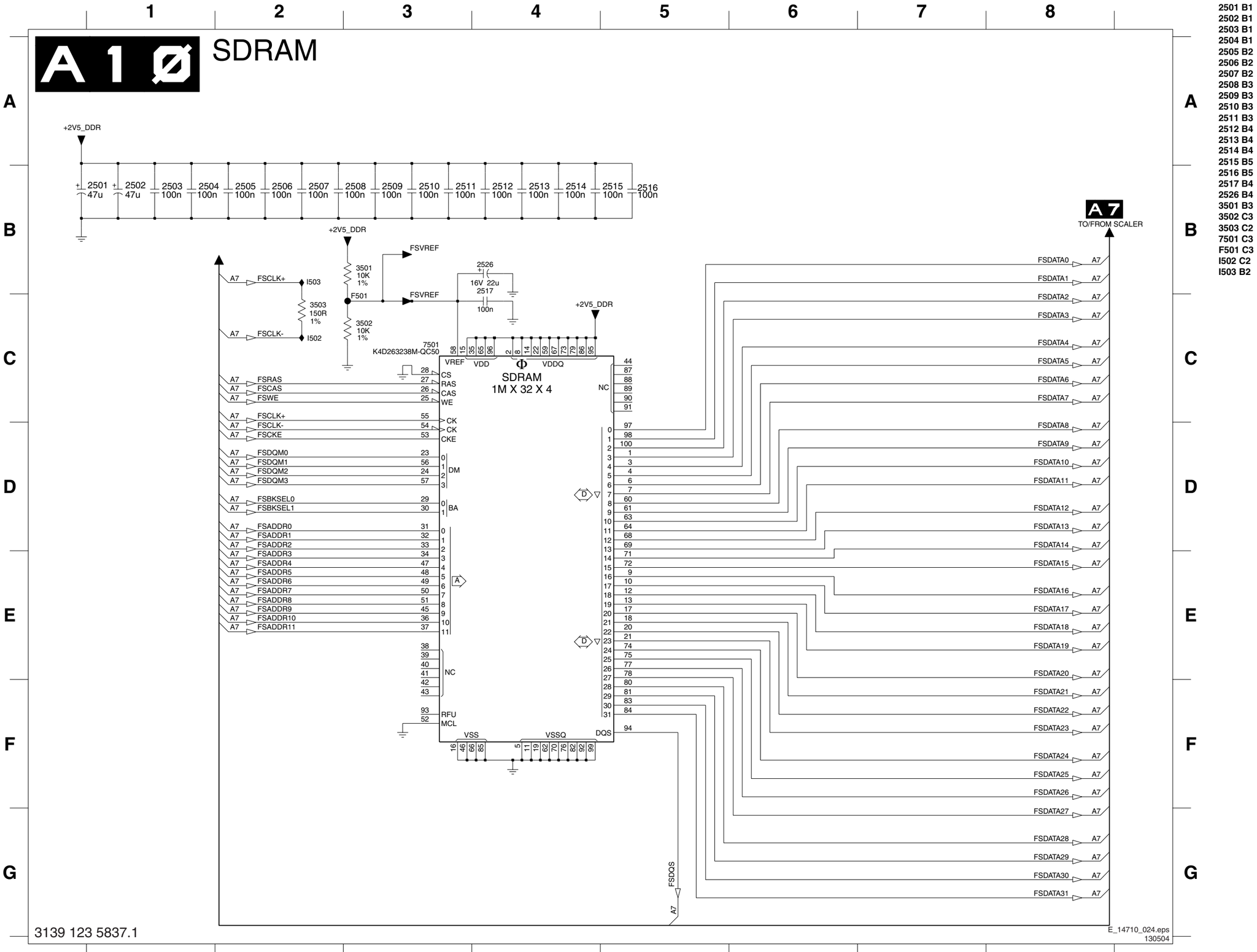

2501 B1
2502 B1
2503 B1
2504 B1
2505 B2
2506 B2
2507 B2
2508 B3
2509 B3
2510 B3
2511 B3
2512 B4
2513 B4
2514 B4
2515 B5
2516 B5
2517 B4
2526 B4
3501 B3
3502 C3
3503 C2
7501 C3
F501 C3
I502 C2
I503 B2

Small Signal Board: Flash / Control

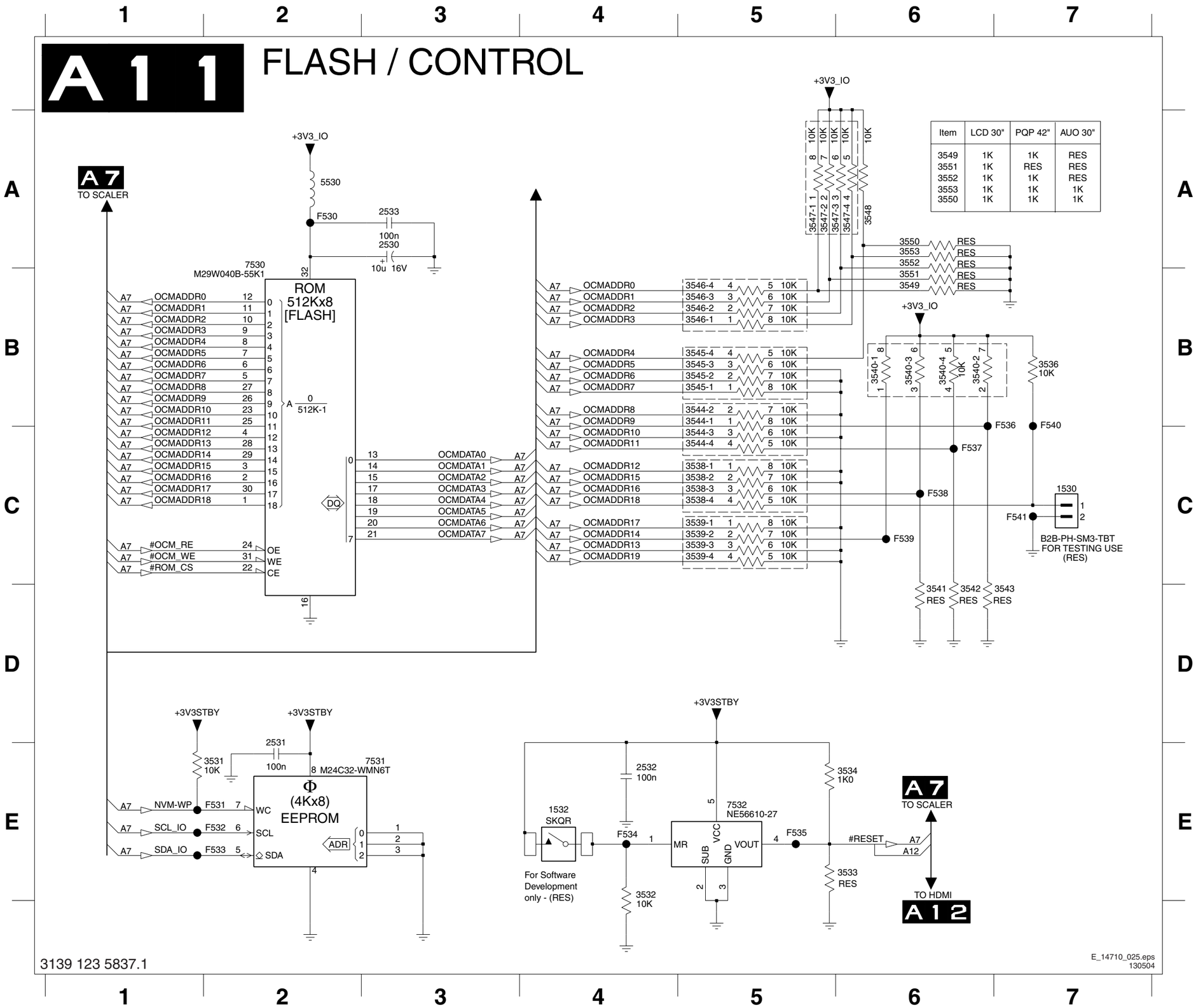

Item	LCD 30"	PQP 42"	AUO 30"
3549	1K	1K	RES
3551	1K	RES	RES
3552	1K	1K	RES
3553	1K	1K	1K
3550	1K	1K	1K

1530 C7
1532 E4
2530 A3
2531 E2
2532 E4
2533 A3
3531 E2
3532 E4
3533 E6
3534 E6
3536 B7
3538-1 C5
3538-2 C5
3538-3 C5
3538-4 C5
3539-1 C5
3539-2 C5
3539-3 C5
3539-4 C5
3540-1 B6
3540-2 B6
3540-3 B6
3540-4 B6
3541 D6
3542 D6
3543 D7
3544-1 B5
3544-2 B5
3544-3 C5
3544-4 C5
3545-1 B5
3545-2 B5
3545-3 B5
3545-4 B5
3546-1 B5
3546-2 B5
3546-3 B5
3546-4 B5
3547-1 A5
3547-2 A5
3547-3 A6
3547-4 A6
3548 A6
3549 B6
3550 A6
3551 B6
3552 A6
3553 A6
5530 A2
7530 A2
7531 E3
7532 E5
F530 A2
F531 E2
F532 E2
F533 E2
F534 E4
F535 E5
F536 C7
F537 C6
F538 C6
F539 C6
F540 C7
F541 C7

Small Signal Board: HDMI

2803 B6 2806 B8 2807 B6 2808 B8 2809 B7 2810 B5 2811 B6 2812 B3 2813 B7 2814 B7 2815 B8 2816 B5 2817 B6 2818 B6 2819 B7 2820 B7 2821 C8 2822 B5 2823 C5 2824 B6 2825 B7 2826 B7 2827 C8 2828 B5 2829 C6 2830 B6 2832 D3 2833 E11 2834 E12 2835 F11 2836 F12 2837 G4 2838 G4 2839 G4 2840 G4 2841 G11 2842 G13 2843 H12 2844 H12 2845 H11 2846 H13 2847 F13 2848 F13 2849 D2 2850 G14 2851 G14 3802-1 B11 3802-2 B11 3802-3 C11 3802-4 C11 3803-1 C11 3803-2 C11 3803-3 C11 3803-4 C11 3804-1 C11 3804-2 D11 3804-3 D11 3804-4 D11 3805-1 D11 3805-2 D11 3805-3 D11 3805-4 D11 3806-1 E11 3806-2 E11 3806-3 E11 3806-4 E11 3807 H9 3808 B2 3809 B3 3810 B3 3813-1 G9 3813-2 G9 3813-3 G9 3813-4 G9 3815 H11 3816 H11 3817 H12 3819 H13 3821 D5 3822 D4 3823 D4 3824 D4 3825 D4 3826 E12 3827 E12 3828 D2 3829 G14 3830 H9 3831 G4 3832 D2 3833 G15 3834 F4 3835 C5 3836 F14 3837 H14 3838 F14 3839 H15 4836 G14 4838 G14 5801 B6 5802 B5 5803 B7 5804 B6 5805 B7 7806 E4 7807 E3 7808 D5 7809 F11 7810 G13 7801 B2 7810 G13 F801 B6 F802 B5 F803 B7 F804 B6 F805 B7 F806 G2 F807 G2 F808 I7 F809 B3 F810 G10 F811 F13 F820 D2 F821 D2 F822 D2 F823 I2 F824 D2 F826 E12 F827 F12 I802 D2 I803 D3 I815 H11 I816 H11 I819 H13 I822 E4 I823 E4 I824 G5 I825 G5 I826 G5 I827 H14 I828 I14 I834 F5 I836 F13 I838 F13 I840 G4 I841 G11 I842 H12 I844 H12 I847 F13 I848 F13

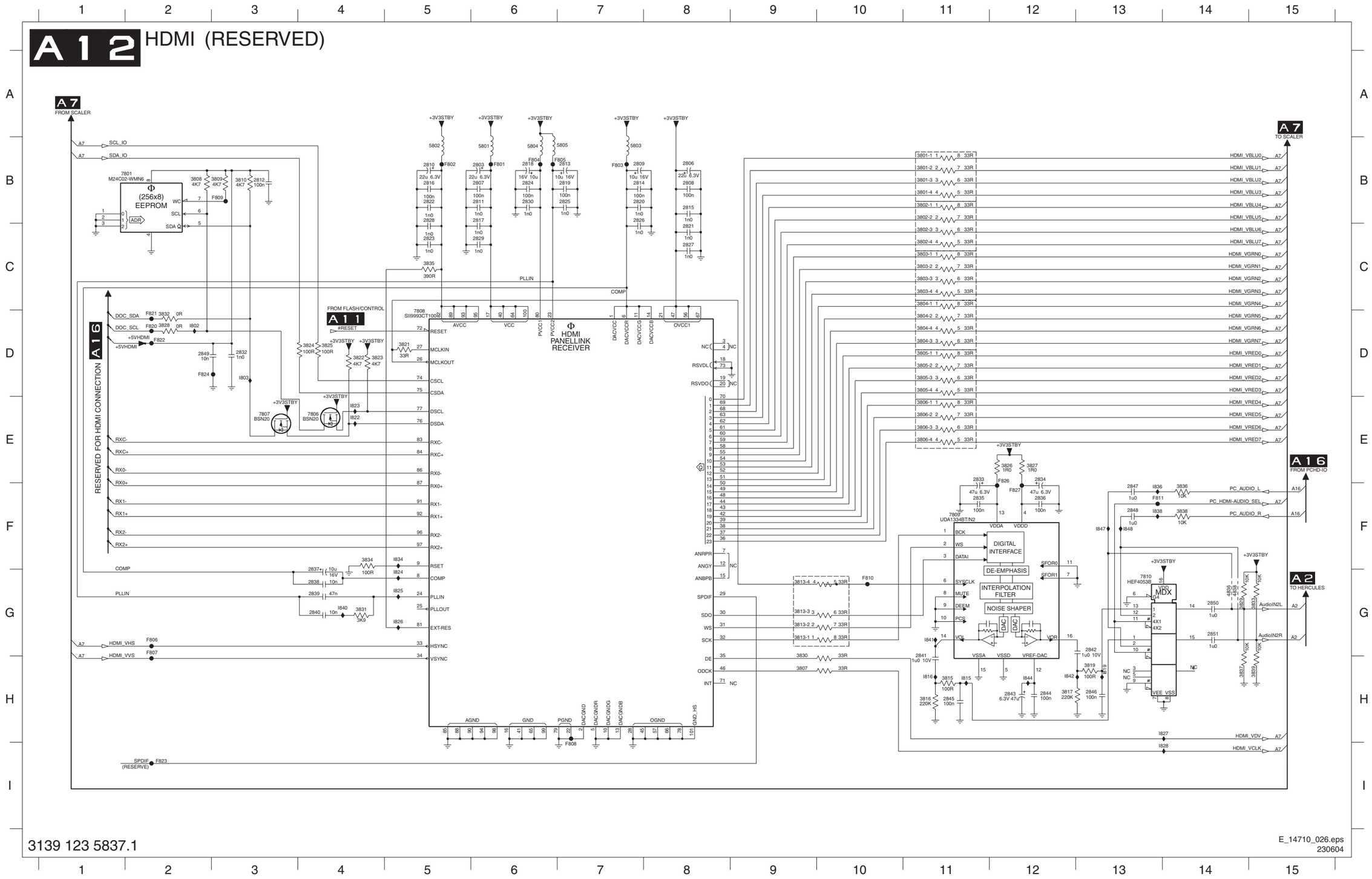

3139 123 5837.1

E_14710_026.eps
230604

Small Signal Board: PCHD MUX

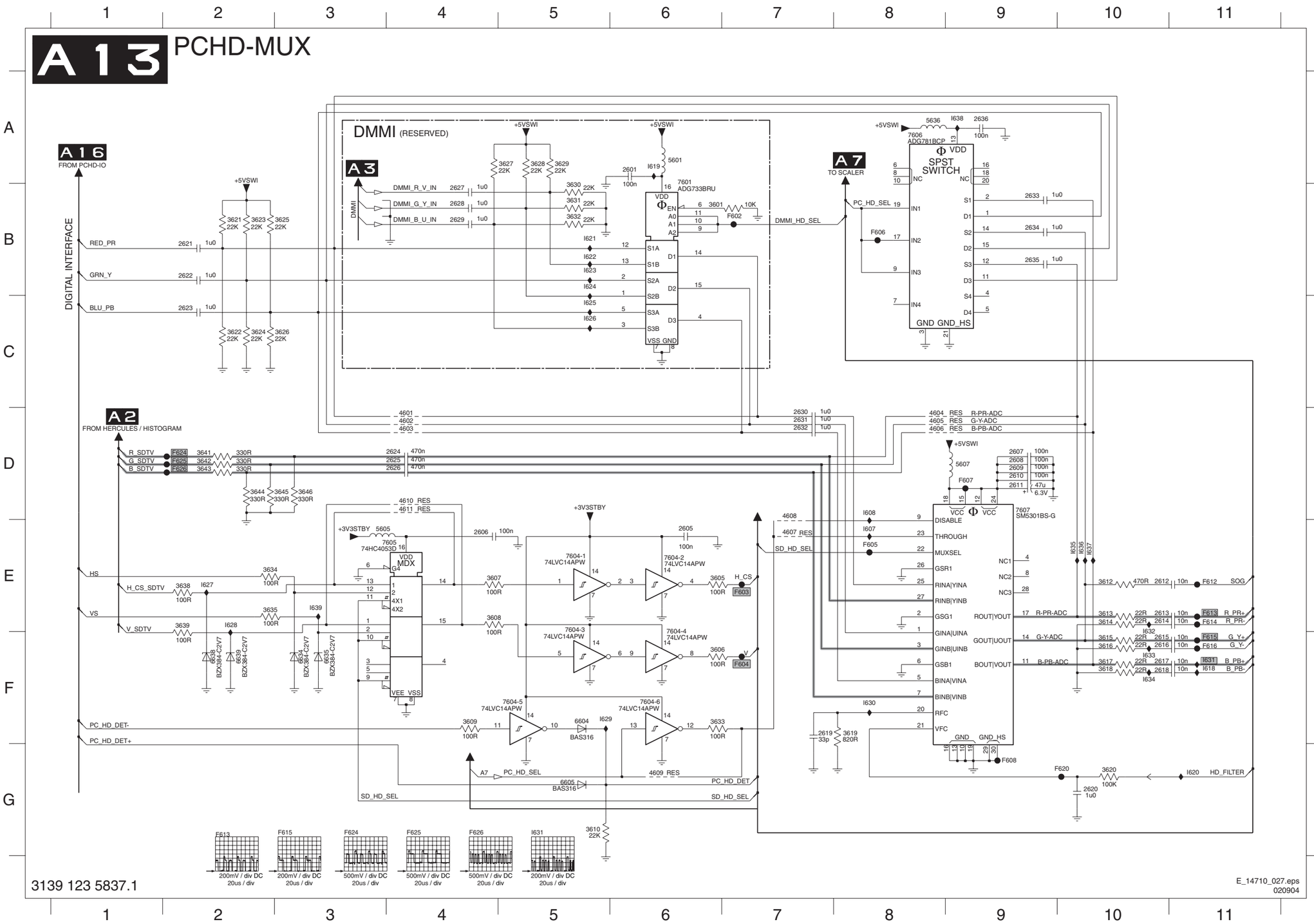

2601 A6	7601 B6
2605 E6	7604-1 E5
2606 E4	7604-2 E6
2607 D9	7604-3 F5
2608 D9	7604-4 F6
2609 D9	7604-5 F5
2610 D9	7604-6 F6
2611 D9	7605 E4
2612 E10	7606 A8
2613 E10	7607 D9
2614 E10	F602 B7
2615 F10	F603 E7
2616 F10	F604 F7
2617 F10	F605 E8
2618 F10	F606 B8
2619 F7	F607 D9
2620 G10	F608 G9
2621 B2	F612 E11
2622 B2	F613 E11
2623 C2	F614 E11
2624 D4	F615 F11
2625 D4	F616 F11
2626 D4	F620 G10
2627 B4	F624 D2
2628 B4	F625 D2
2629 B4	F626 D2
2630 D7	I607 E8
2631 D7	I608 D8
2632 D7	I618 F11
2633 B9	I619 A6
2634 B9	I620 G11
2635 B9	I621 B5
2636 A9	I622 B5
3601 B6	I623 B5
3605 E6	I624 B5
3606 F6	I625 C5
3607 E4	I626 C5
3608 E4	I627 E2
3609 F4	I628 E2
3610 G5	I629 F5
3612 E10	I630 F8
3613 E10	I631 F11
3614 E10	I632 E10
3615 F10	I633 F10
3616 F10	I634 F10
3617 F10	I635 E10
3618 F10	I636 E10
3619 F8	I637 E10
3620 G10	I638 A9
3621 B2	I639 E3
3622 C2	
3623 B2	
3624 C2	
3625 B3	
3626 C3	
3627 A5	
3628 A5	
3629 A5	
3630 A5	
3631 B5	
3632 B5	
3633 F6	
3634 E2	
3635 E2	
3638 E2	
3639 E2	
3641 D2	
3642 D2	
3643 D2	
3644 D2	
3645 D3	
3646 D3	
4601 D4	
4602 D4	
4603 D4	
4604 D8	
4605 D8	
4606 D8	
4607 E7	
4608 D7	
4609 G6	
4610 D4	
4611 D4	
5601 A6	
5605 E3	
5607 D9	
5636 A8	
6604 F5	
6605 G5	
6634 F3	
6635 F3	
6638 F2	
6639 F2	

Small Signal Board: Supply

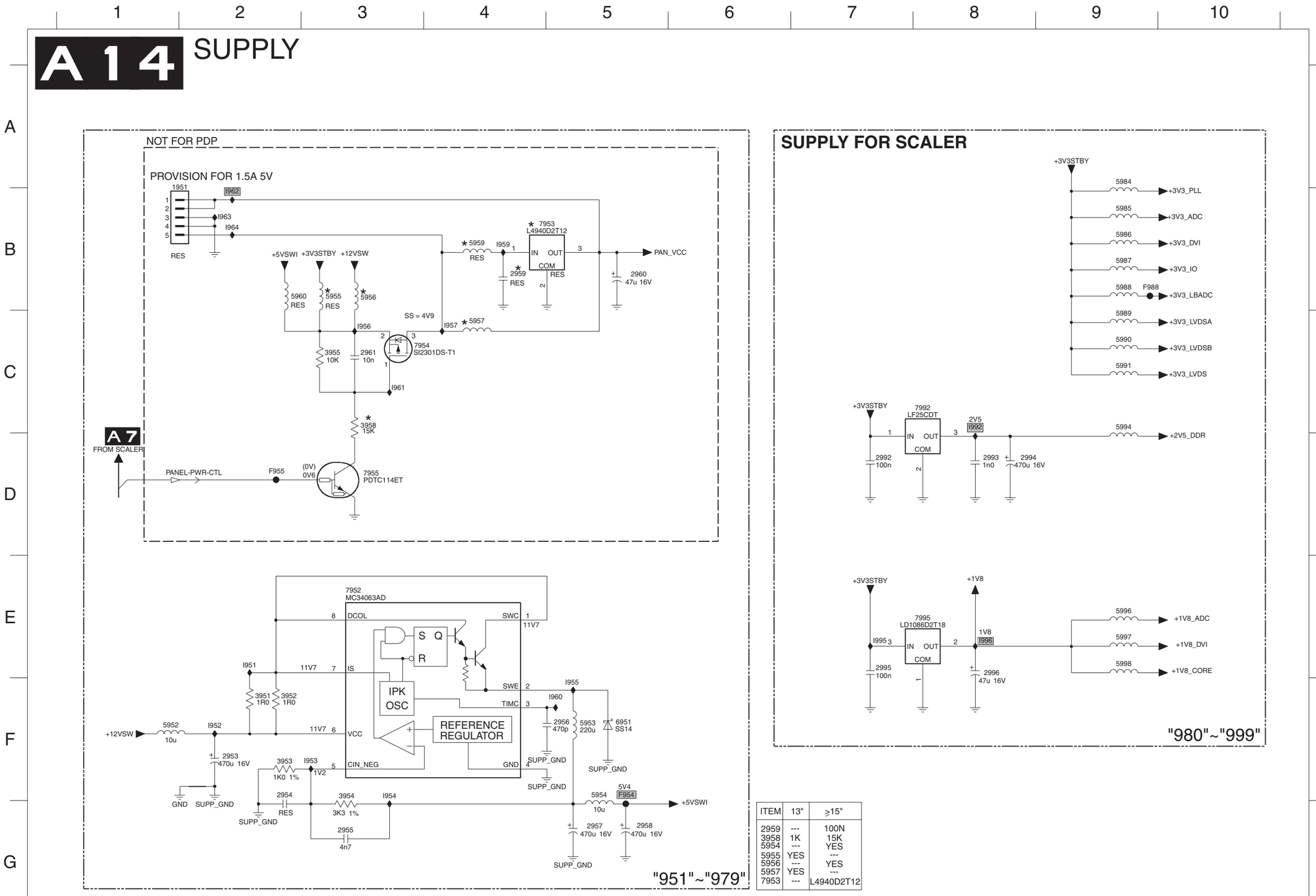

ITEM	13"	≥15"
2959	---	100N
3958	1K	15K
5954	---	YES
5955	YES	---
5956	---	YES
5957	YES	---
7953	---	L4940D2T12

1951 B2
2953 F2
2954 F2
2955 G3
2956 F5
2957 G5
2958 G5
2959 B4
2960 B5
2961 C3
2992 D7
2993 D8
2994 D8
2995 E7
2996 E8
3951 F2
3952 F2
3953 F2
3954 F3
3955 C3
3958 C3
5952 F1
5953 F5
5954 F5
5955 B3
5956 B3
5957 C4
5959 B4
5960 B2
5984 A9
5985 B9
5986 B9
5987 B9
5988 B9
5989 C9
5990 C9
5991 C9
5994 C9
5996 E9
5997 E9
5998 E9
6951 F5
7952 E3
7953 B5
7954 C4
7955 D3
7992 C8
7995 E8
F954 F5
F955 D2
F988 B9
I951 E2
I952 F2
I953 F3
I954 F3
I955 F5
I956 C3
I957 C4
I959 B4
I960 F5
I961 C3
I962 B2
I963 B2
I964 B2
I992 C8
I995 E7
I996 E8

E_14710_028.eps
020904

Small Signal Board: DC-DC Converter

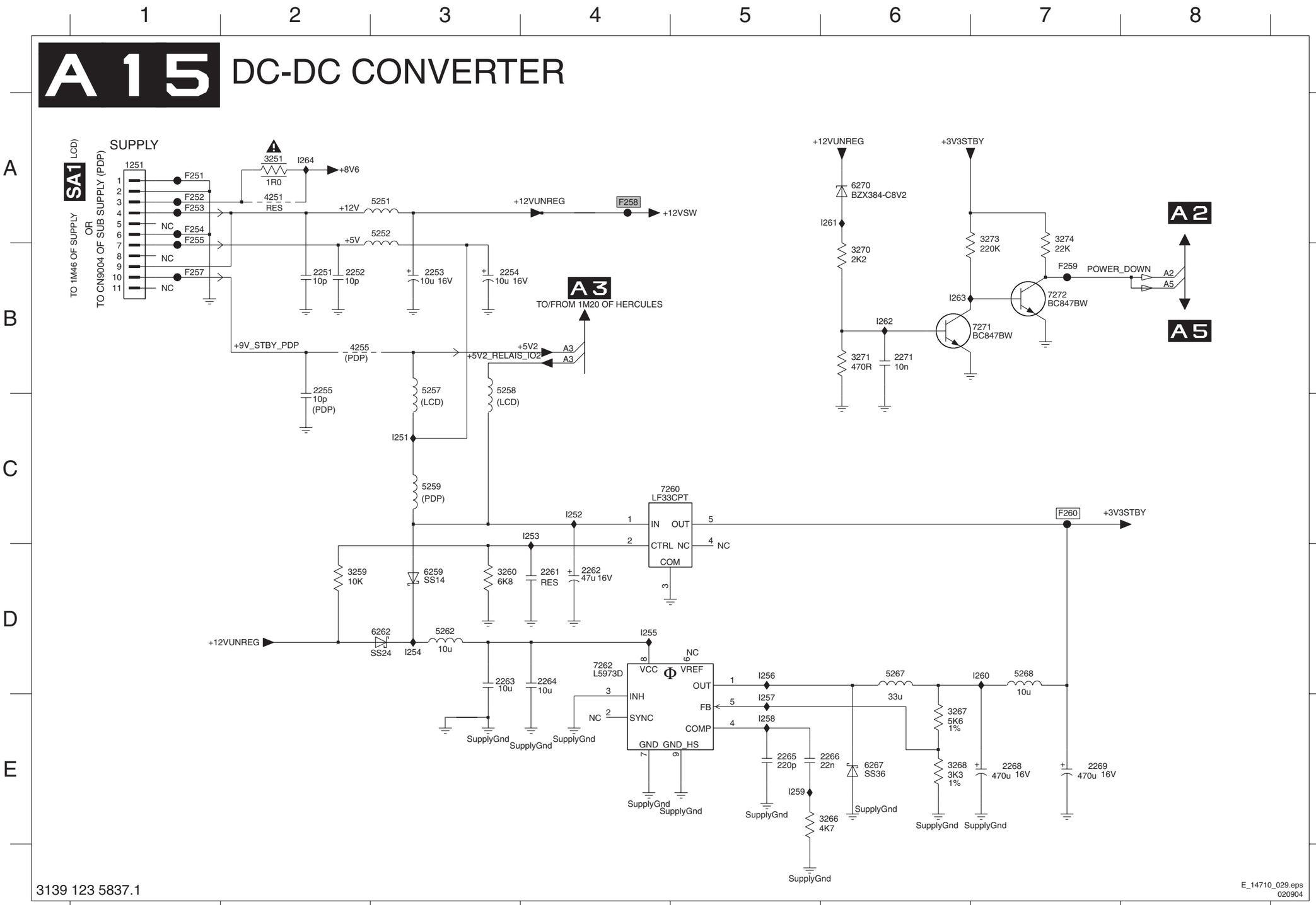

3139 123 5837.1

1251 A1
2251 B2
2252 B2
2253 B3
2254 B3
2255 B2
2261 D4
2262 D4
2263 D3
2264 D4
2265 E5
2266 E5
2268 E7
2269 E7
2271 B6
3251 A2
3259 D2
3260 D3
3266 E5
3267 E6
3268 E6
3270 B6
3271 B6
3273 A7
3274 A7
4251 A2
4255 B2
5251 A3
5252 A3
5257 B3
5258 B3
5259 C3
5262 D3
5267 D6
5268 D7
6259 D3
6262 D3
6267 E6
6270 A6
7260 C4
7262 D4
7271 B7
7272 B7
F251 A1
F252 A1
F253 A1
F254 A1
F255 A1
F257 B1
F258 A4
F259 B7
F260 C7
I251 C3
I252 C4
I253 C4
I254 D3
I255 D4
I256 D5
I257 E5
I258 E5
I259 E5
I260 D7
I261 A6
I262 B6
I263 B6
I264 A2

Small Signal Board: PCHD IO

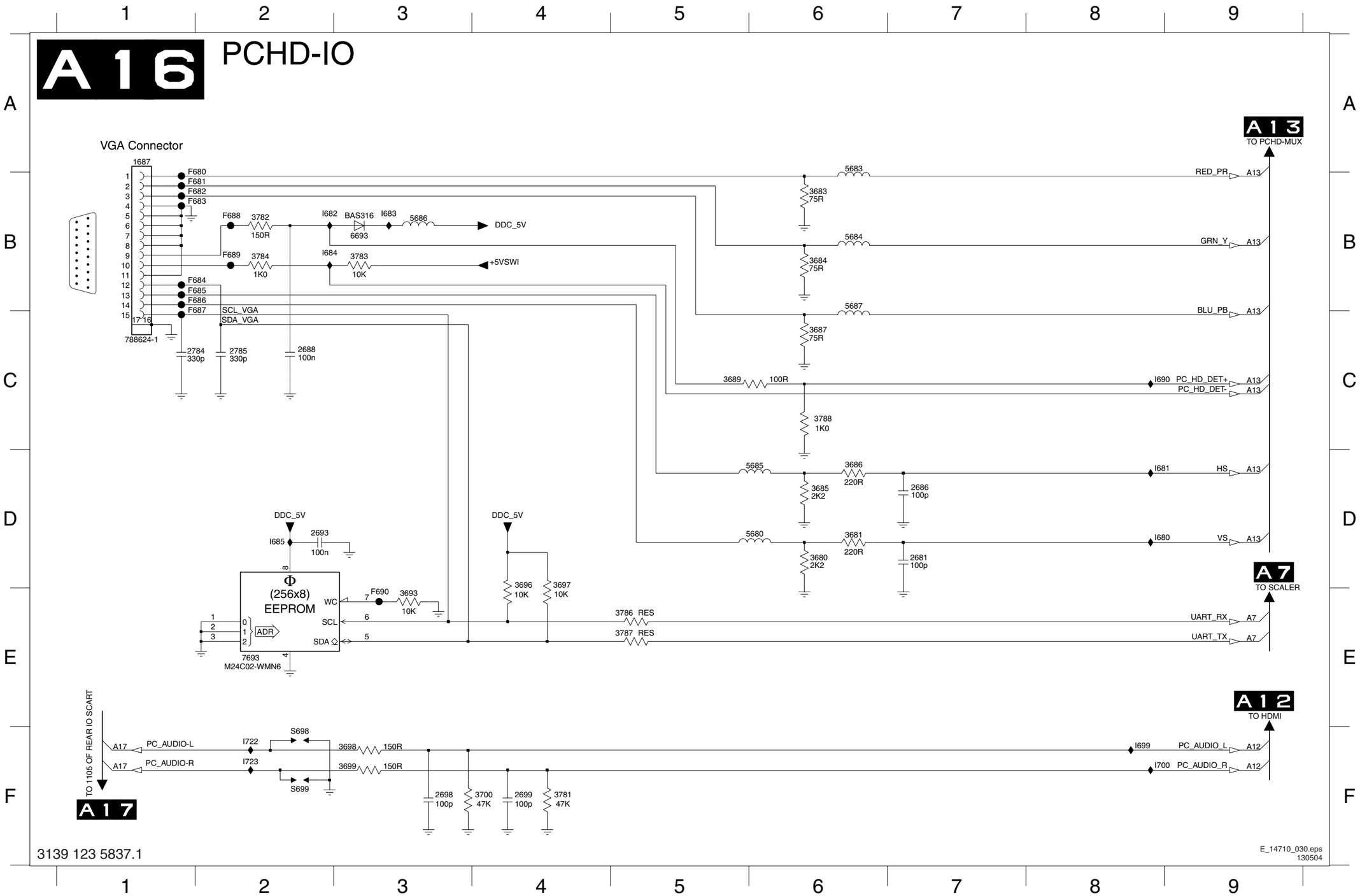

1687 A1
2681 D7
2686 D7
2688 C2
2693 D2
2698 F3
2699 F4
2784 C1
2785 C2
3680 D6
3681 D6
3683 B6
3684 B6
3685 D6
3686 D6
3687 C6
3689 C5
3693 E3
3696 D4
3697 D4
3698 F3
3699 F3
3700 F4
3781 F4
3782 B2
3783 B3
3784 B2
3786 E5
3787 E5
3788 C6
5680 D6
5683 A6
5684 B6
5685 D6
5686 B3
5687 B6
6693 B3
7693 E2
F680 B2
F681 B2
F682 B2
F683 B2
F684 B2
F685 B2
F686 B2
F687 C2
F688 B2
F689 B2
F690 E3
I680 D8
I681 D8
I682 B2
I683 B3
I684 B2
I685 D2
I690 C8
I699 F8
I700 F8
I722 F2
I723 F2
S698 F2
S699 F2

Small Signal Board: Rear IO Scart

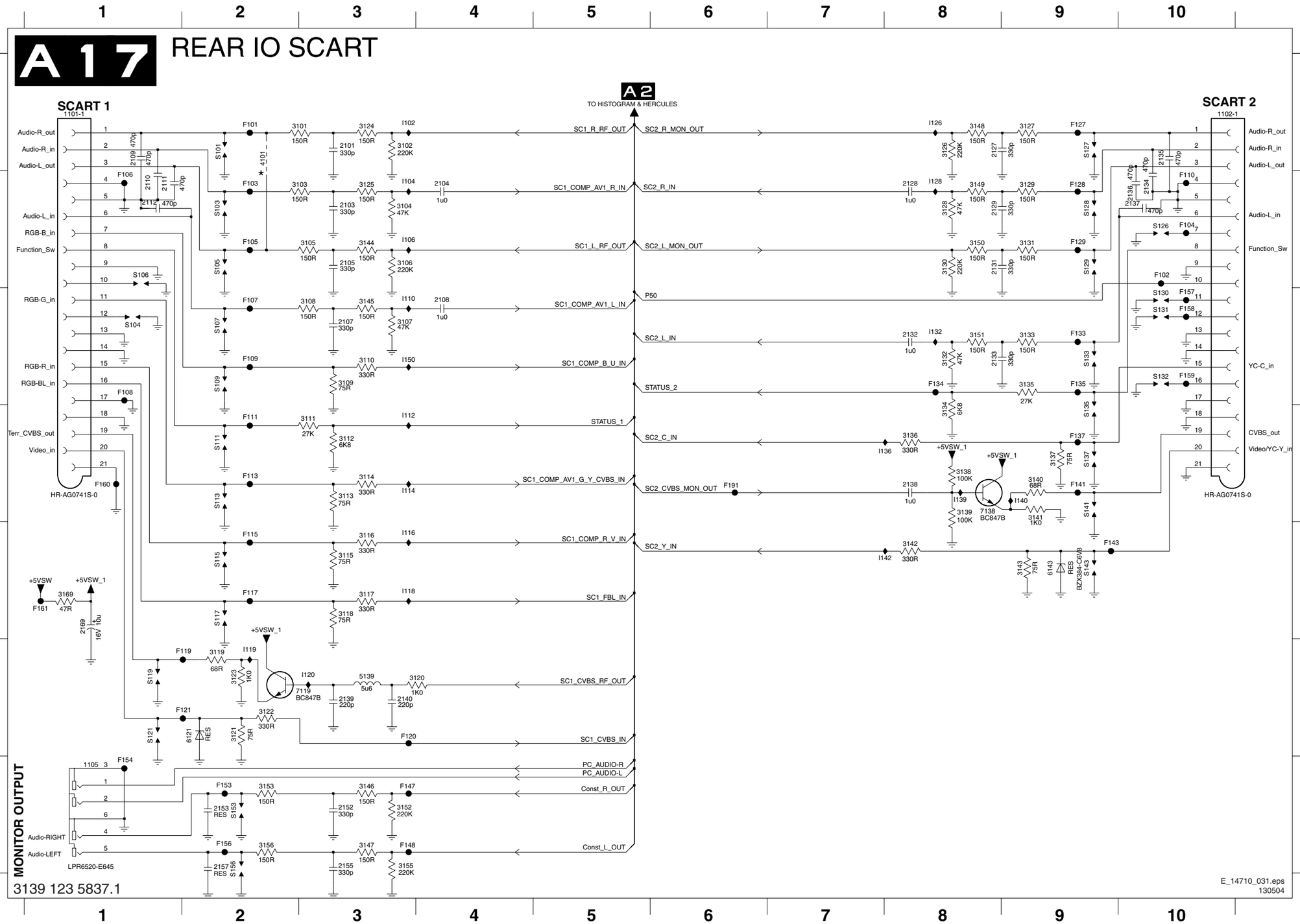

1101-1 A1
1102-1 A10
1105 G1
2101 A3
2103 B3
2104 B4
2105 B3
2107 C3
2108 C4
2109 A1
2110 B1
2111 B1
2112 B1
2127 A8
2128 B8
2129 B8
2131 B8
2132 C8
2133 C8
2134 B10
2135 A10
2136 B10
2137 B10
2138 D8
2139 F3
2140 F3
2152 G3
2153 G2
2155 G3
2157 G2
2169 E1
3101 A3
3102 A3
3103 B3
3104 B3
3105 B3
3106 B3
3107 C3
3108 C3
3109 C3
3110 C3
3111 D3
3112 D3
3113 D3
3114 D3
3115 E3
3116 E3
3117 E3
3118 E3
3119 F2
3120 F4
3121 F2
3122 F2
3123 F2
3124 A3
3125 B3
3126 A8
3127 A9
3128 B8
3129 B9
3130 B8
3131 B9
3132 C8
3133 C9
3134 D8
3135 C9
3136 D8
3137 D9
3138 D8
3139 D8
3140 D9
3141 D9
3142 E8
3143 E9
3144 B3
3145 C3
3146 G3
3147 G3
3148 A8
3149 B8
3150 B8
3151 C8
3152 G3
3153 G2
3155 G3
3156 G2
3169 E1
4101 A2
5139 F3
6121 F2
6143 E9
7119 F3
7138 D8
F101 A2
F102 B10
F103 B2
F104 B10
F105 B2
F106 B1
F107 C2
F108 C1
F109 C2
F110 B10
F111 D2
F113 D2
F115 E2
F117 E2
F119 F2
F120 F3
F121 F2
F127 A9
F128 B9
F129 B9
F133 C9
F134 C8
F135 C9
F137 D9
F141 D9
F143 E9
F147 G3
F148 G3
F153 G2
F154 G1
F156 G2
F157 C10
F158 C10
F159 C10
F160 D1
F161 E1
F191 D6
I102 A3
I104 B3
I106 B3
I110 C3
I112 D3
I114 D3
I116 E3
I118 E3
I119 F2
I120 F3
I126 A8
I128 B8
I132 C8
I136 D8
I139 D8
I140 D9
I142 E8
I150 C3
S101 A2
S103 B2
S104 C1
S105 B2
S106 B1
S107 C2
S109 C2
S111 D2
S113 D2
S115 E2
S117 E2
S119 F1
S121 F1
S126 B10
S127 A9
S128 B9
S129 B9
S130 C10
S131 C10
S132 C10
S133 C9
S135 D9
S137 D9
S141 D9
S143 E9
S153 G2
S156 G2

Layout Small Signal Panel (Top Side Overview)

1001	B5	2027	C5	2127	D3	2169	D3	2386	A5	2530	A4	2699	D2	2825	C2	2867	A3	2953	A2	3016	B4	3105	D5	3122	D4	3139	D2	3169	D5	3403	B2	3563	B5	3635	C3	3701	A5	3803	C2	3931	A4	5004	B5	5687	D1	6564	B5	7119	D4	7693	D1
1008	C4	2035	B5	2128	D4	2262	A1	2392	A5	2560	C5	2708	A5	2826	C2	2868	A3	2954	A2	3017	B4	3106	D5	3123	D4	3140	D3	3266	C1	3404	B2	3564	B5	3638	C3	3702	A5	3804	C2	3932	A4	5005	C5	5801	C1	6604	C3	7138	D3	7706	A5
1036	B7	2040	B4	2129	D4	2263	C1	2396	C5	2561	C4	2709	C6	2830	C1	2869	A3	2955	A2	3018	B4	3107	D5	3124	D5	3141	D3	3267	C1	3405	B2	3565	B5	3639	C3	3704	A5	3805	C2	3933	A4	5006	B4	5802	C1	6605	C3	7262	C1	7709	A6
1401	B3	2061	B5	2131	D3	2264	C1	2401	C3	2562	C4	2784	D1	2833	C1	2870	A3	2956	A2	3019	B4	3108	D5	3125	D5	3142	D2	3268	C1	3406	B2	3566	B4	3680	D1	3712	A5	3806	C2	3951	A2	5072	B5	5804	C1	6634	C3	7370	C5	7710	A5
1450	A3	2063	B5	2132	D4	2265	C1	2402	B4	2563	B4	2785	D1	2834	C2	2871	A3	2957	A2	3049	B4	3109	D5	3126	D3	3143	D2	3359	C5	3407	B2	3567	B5	3681	D1	3713	A5	3807	C2	3952	A2	5139	D4	5805	C2	6635	C3	7371	C5	7713	A6
1860	A3	2071	B5	2133	D4	2266	C1	2417	A2	2564	C5	2803	C1	2837	C2	2874	A3	2958	A2	3050	B4	3110	D5	3127	D3	3144	D5	3364	C4	3408	B2	3568	B5	3683	D1	3723	A6	3813	C2	3953	A2	5262	A1	5874	A3	6638	C3	7372	C5	7714	A6
1861	A3	2089	C4	2134	D3	2268	B1	2418	A2	2565	A7	2806	C2	2838	C2	2875	A3	2960	A3	3051	B4	3111	D5	3128	D4	3145	D5	3371	C5	3409	A2	3605	C3	3684	D1	3724	A6	3821	C2	3954	A2	5267	C1	5882	A3	6639	C3	7376	B5	7808	C2
1862	A3	2101	D5	2135	D3	2269	A1	2434	A3	2605	C3	2807	C1	2839	C2	2882	A3	2994	A1	3052	B4	3112	D5	3129	D4	3146	D2	3372	C5	3410	B2	3606	C3	3685	D1	3729	B5	3824	C2	4009	C4	5268	B1	5930	A4	6693	D1	7377	A5	7930	A4
1863	A3	2103	D5	2136	D3	2355	B5	2435	C3	2606	C3	2808	C2	2840	C2	2911	A5	2996	B1	3053	B5	3113	D5	3130	D3	3147	D2	3374	C5	3411	A2	3607	C3	3686	D1	3781	D2	3825	C2	4010	C4	5530	A4	5931	A5	6701	A5	7401	B3	7952	A2
1864	A3	2104	D5	2137	D4	2356	C5	2451	C3	2611	C3	2809	C2	2843	C1	2920	A4	3001	A5	3060	B5	3114	D5	3131	D3	3148	D3	3378	A5	3412	B2	3608	C3	3687	D1	3782	D1	3826	C2	4062	B5	5560	C5	5952	A2	6930	A5	7501	B2		
2002	C4	2105	D5	2138	D2	2357	C5	2465	C3	2625	C4	2810	C1	2860	A3	2921	A4	3002	A5	3085	B5	3115	D5	3132	D4	3149	D4	3380	A5	3413	B2	3609	C3	3689	D2	3783	D1	3830	C2	4101	D5	5605	C3	5953	A1	6951	A1	7530	A3		
2006	B5	2107	D5	2139	D4	2360	B4	2470	C3	2626	C4	2813	C2	2861	A3	2930	A4	3003	A5	3086	B5	3116	D5	3133	D4	3150	D3	3381	A5	3414	B2	3610	C3	3693	D1	3784	D1	3831	C2	4609	C3	5636	C3	5954	A2	7001	A5	7560	B5		
2007	B5	2108	D5	2140	D4	2375	C5	2478	A3	2681	D2	2814	C2	2862	A3	2931	A5	3004	A5	3087	B5	3117	D5	3134	D3	3151	D4	3382	A5	3441	B3	3621	C2	3696	D1	3786	D1	3834	C2	4610	C3	5680	D1	6005	C5	7002	A5	7561	B5		
2008	B5	2109	D5	2152	D2	2376	A5	2482	A3	2686	D1	2818	C1	2863	A3	2932	A4	3007	B5	3101	D5	3118	D5	3135	D3	3152	D2	3383	A5	3447	A2	3622	C2	3697	D1	3787	D1	3835	C1	4611	C3	5683	D1	6121	D4	7003	A5	7562	C5		
2009	B5	2110	D5	2153	D2	2377	B5	2495	C3	2688	D1	2819	C2	2864	A3	2933	A5	3011	B4	3102	D5	3119	D4	3136	D3	3153	D2	3386	A5	3560	B5	3623	C3	3698	D2	3788	D2	3870	A3	4714	A6	5684	D1	6143	D3	7012	B4	7563	B5		
2012	A5	2111	D5	2155	D2	2380	B4	2501	B1	2693	D1	2820	C2	2865	A3	2934	A4	3014	B4	3103	D5	3120	D5	3137	D3	3155	D2	3401	B2	3561	B5	3624	C3	3699	D2	3801	C2	3871	A3	4715	A5	5685	D1	6267	C1	7013	B4	7604	C3		
2024	A5	2112	D5	2157	D2	2382	B5	2502	B1	2698	D2	2824	C1	2866	A3	2935	B5	3015	B4	3104	D5	3121	D4	3138	D3	3156	D2	3402	B2	3562	B5	3634	C3	3700	D2	3802	C2	3930	A4	5003	B5	5686	D2	6563	B5	7014	B4	7605	C3		

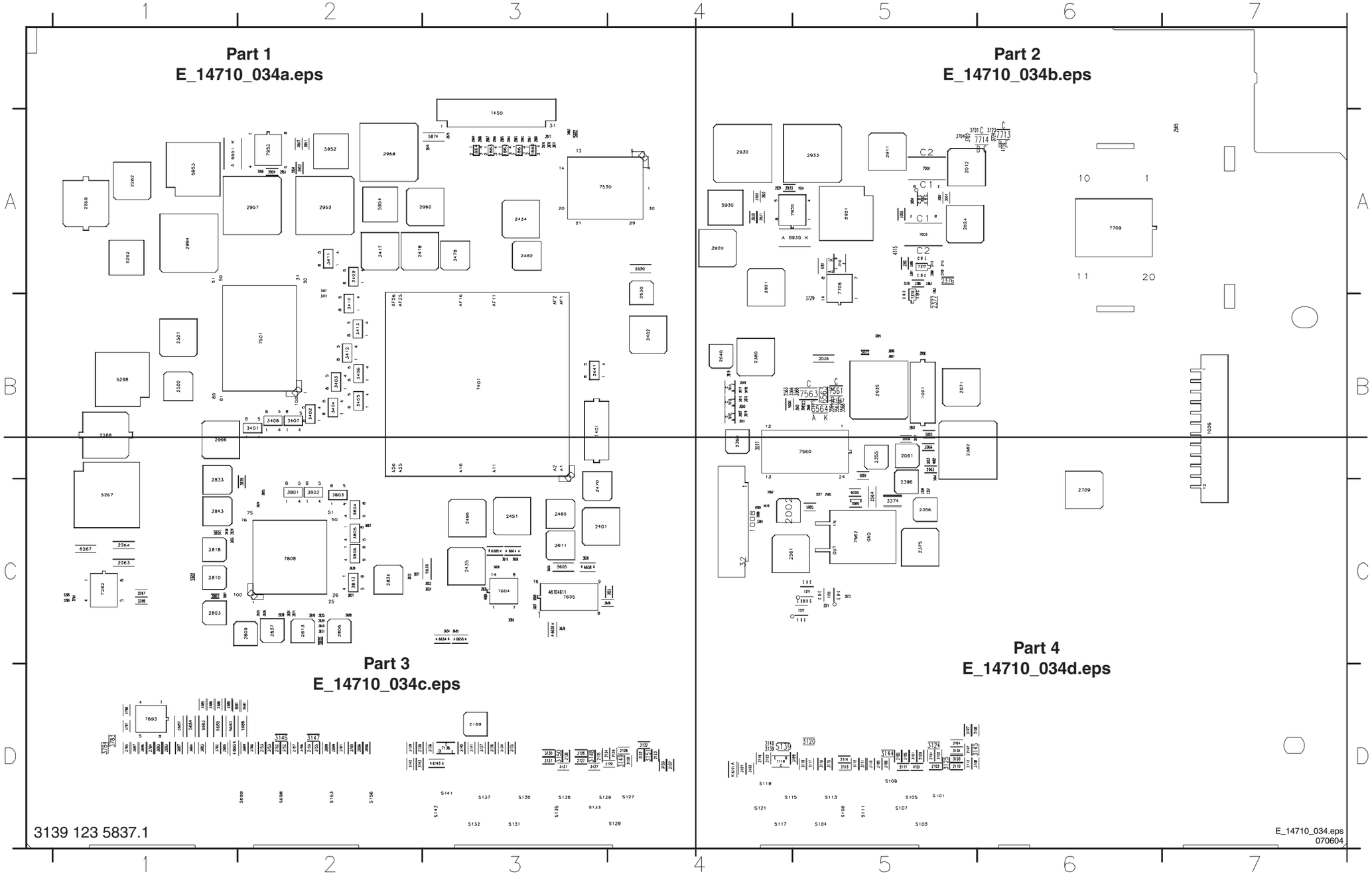

Layout Small Signal Panel (Top Side Part 1)

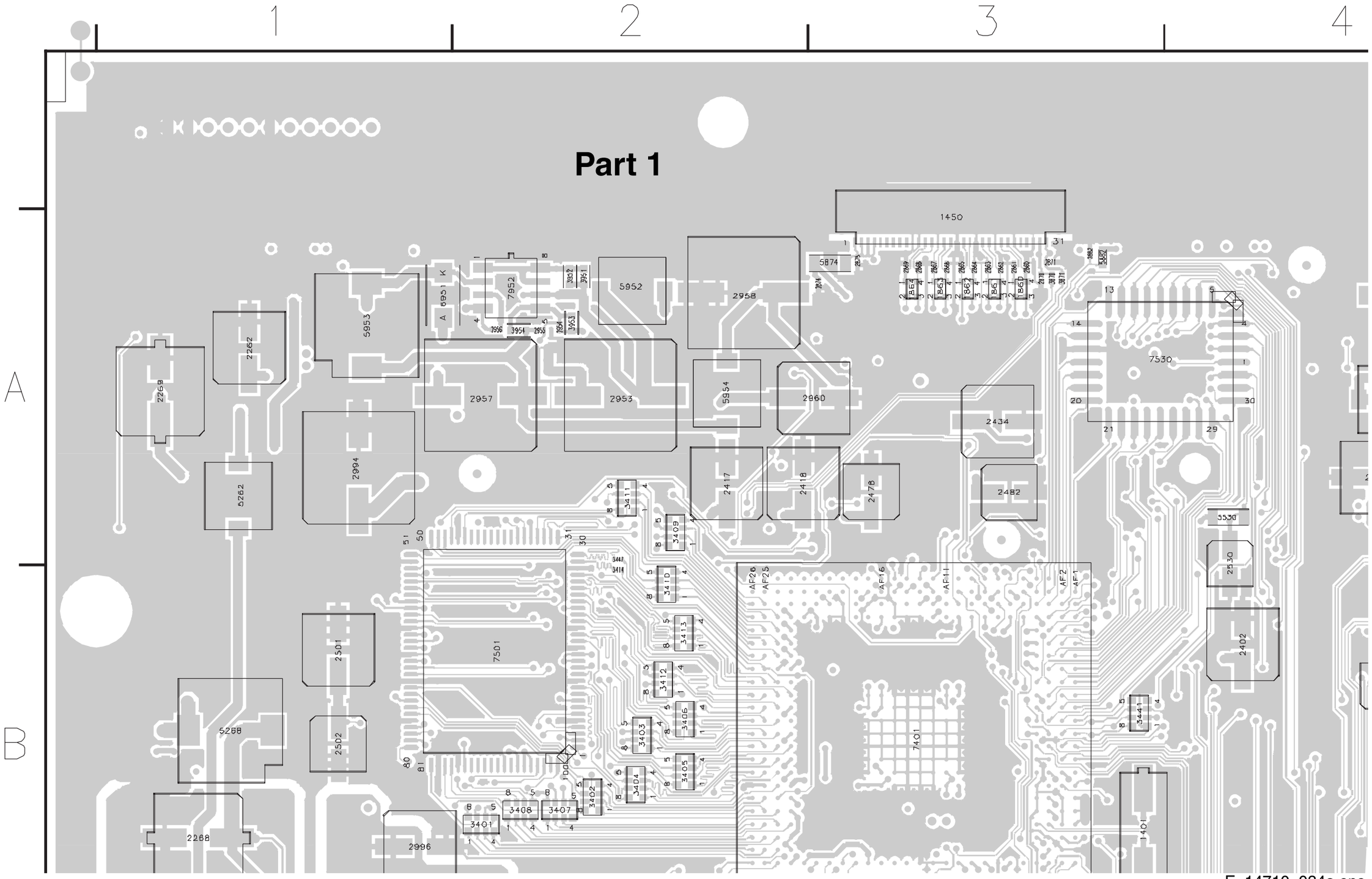

E_14710_034a.eps
070604

Layout Small Signal Panel (Top Side Part 2)

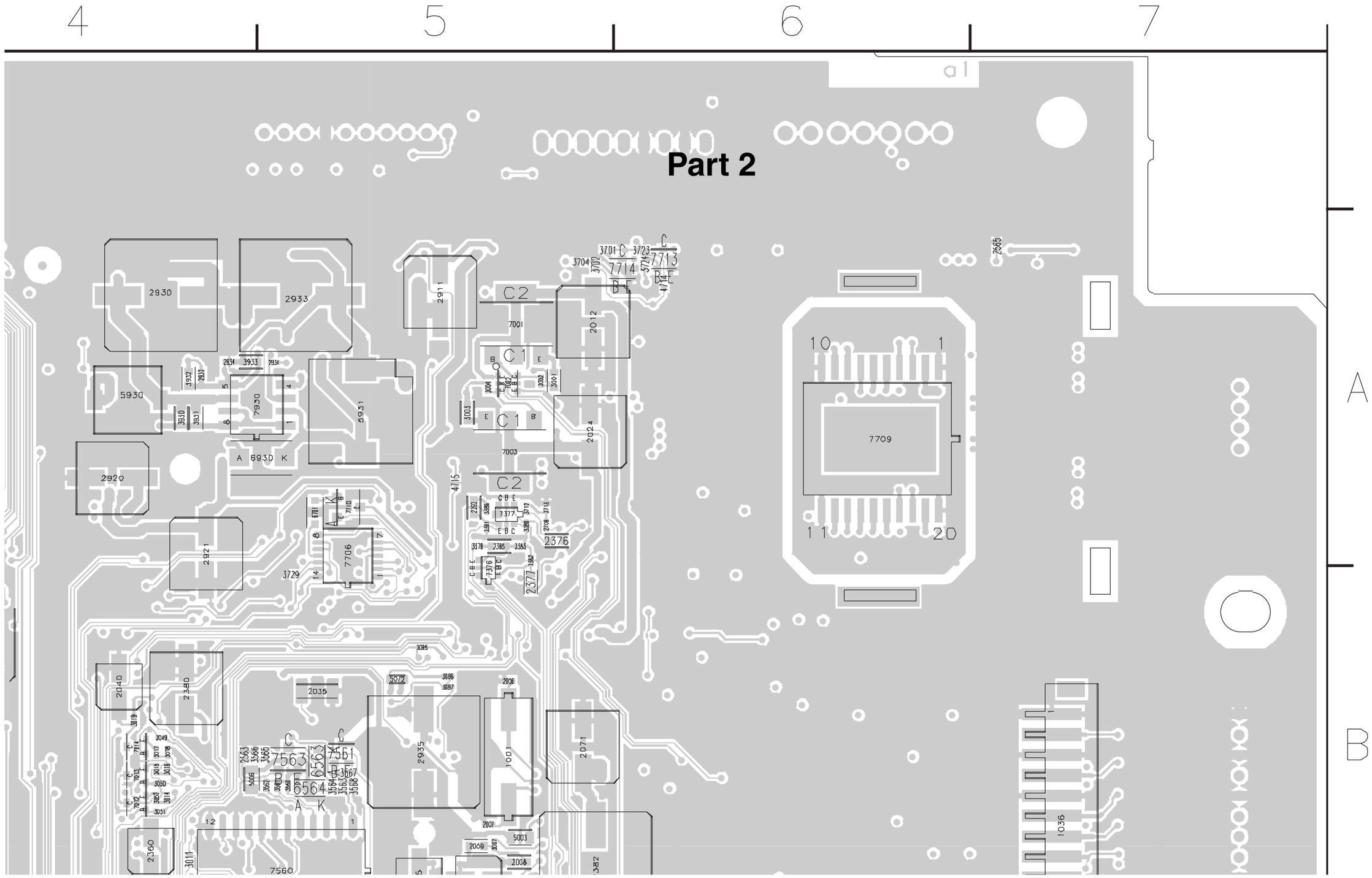

E_14710_034b.eps
070604

Layout Small Signal Panel (Top Side Part 3)

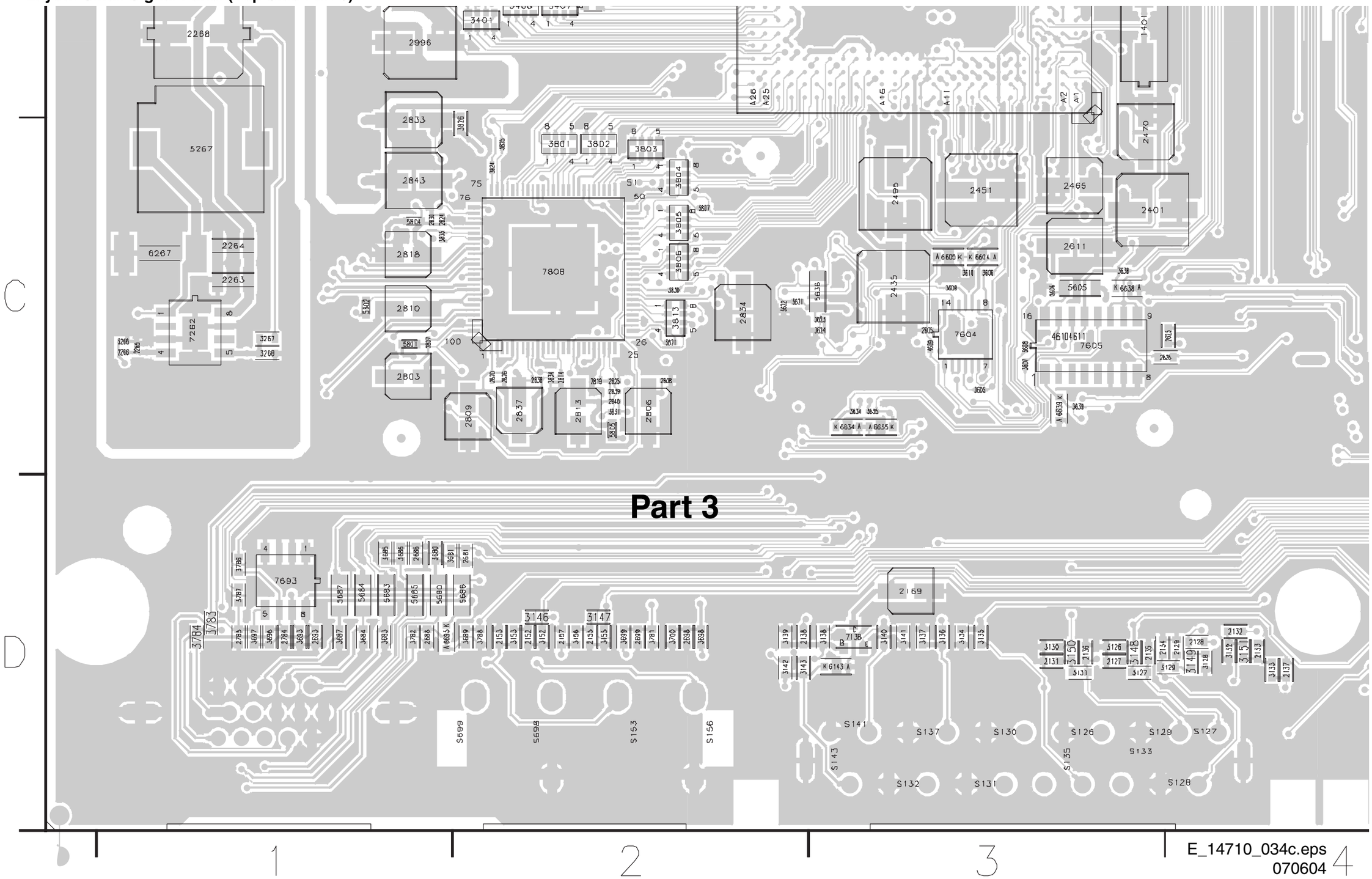

E_14710_034c.eps
070604

Layout Small Signal Panel (Top Side Part 4)

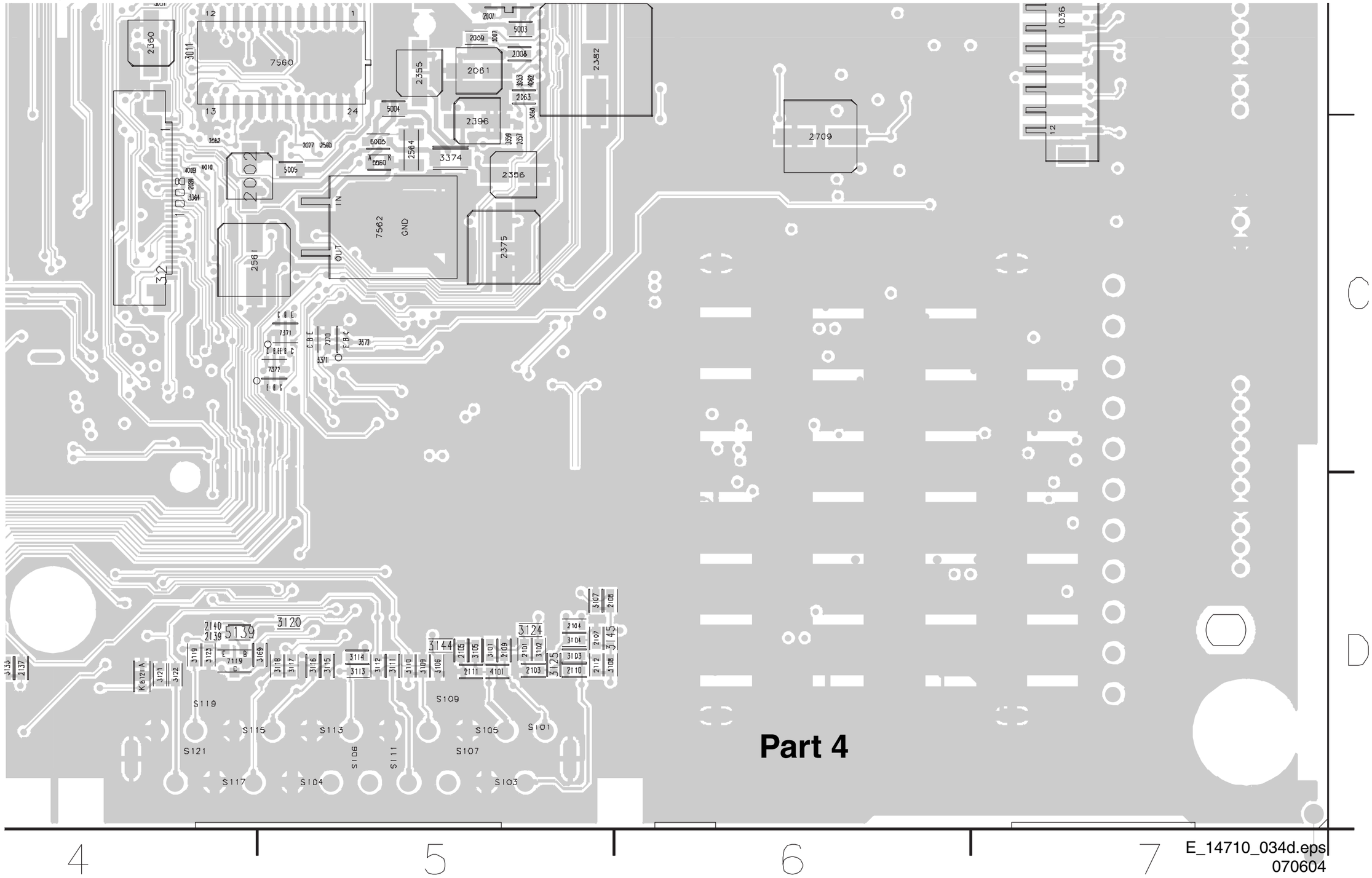

Layout Small Signal Panel (Bottom Side Overview)

1004 C4
1009 C3
1301 D2
1328 C2
1329 B2
1330 C2
1408 A5
1409 B7
1530 A5
1532 B4
1681 D2
1701 C2
1951 A5
2000 B2
2001 B2
2003 C1
2004 B2
2005 B2
2010 B2
2011 B2
2013 C3
2014 C3
2015 C3
2016 C3
2017 C3
2018 C3
2019 A3
2020 A3
2021 A4
2022 B4
2023 C4
2025 B4
2026 B4
2028 A3
2029 B4
2030 B4
2031 B2
2032 B4
2033 B4
2034 A3
2036 B1
2037 B1
2041 B4
2042 A3
2043 B2
2044 B4
2045 C1
2046 C1
2047 A4
2048 C1
2049 C1
2050 C1
2051 A3
2052 B4
2053 C4
2054 B2
2055 B4
2056 B2
2057 C1
2058 C1
2059 B1
2060 B2
2062 D1
2064 B2
2065 C3
2066 C3
2067 D1
2068 B2
2069 B1
2070 B3
2072 B3
2073 B3
2074 B3
2076 B3
2077 B3
2078 B4
2079 B1
2080 B1
2081 B1
2082 C3
2083 C3
2084 B4
2085 B3
2086 B3
2087 B1
2088 B1
2090 B1
2091 B1
2094 B1
2095 C1
2096 C1
2097 C1
2098 C1
2099 B3
2201 A7
2252 A7
2253 A7
2254 A7
2255 A7
2261 A7
2271 A7
2302 D1
2303 D1
2307 C2
2308 C3
2309 C3
2311 D2
2313 C2
2314 C2
2317 C3
2318 C3
2321 C2
2324 C2
2358 C3
2359 C2
2361 B4
2363 C4
2364 B4
2365 C4
2366 B4
2367 B4
2368 C4
2370 C3
2371 C3
2372 C3
2373 C3
2374 C3
2378 B4
2381 B4
2387 C3
2388 C3
2394 B4
2395 C3
2397 C3
2398 C3
2401 B5
2402 B5
2403 B5
2404 B5
2405 B5
2406 B5
2407 B5
2408 B5
2409 B5
2410 B5
2411 B5
2412 B5
2413 B5
2414 B5
2415 B5
2416 B5
2419 B6
2420 B5
2421 B5
2422 B5
2423 B6
2424 B6
2425 B6
2426 B6
2427 B6
2428 B6
2429 B6
2430 B6
2431 B6
2432 B6
2433 B6
2436 B5
2437 B5
2438 B5
2439 B5
2440 B5
2441 B5
2442 B5
2443 B5
2444 B5
2445 B5
2446 B5
2447 B5
2448 B5
2450 B5
2452 B5
2453 B5
2454 B5
2455 B5
2456 B5
2460 B6
2461 B5
2462 B6
2463 B5
2464 B5
2465 B5
2466 B5
2467 B5
2468 B5
2469 B5
2471 B5
2472 B5
2473 B5
2474 B5
2475 B5
2476 B5
2477 B5
2479 B5
2480 B5
2481 B5
2483 B5
2484 B5
2485 B5
2486 B5
2487 B5
2488 B5
2489 B5
2490 B5
2491 C5
2492 B5
2493 B6
2494 B6
2496 B5
2503 A6
2504 B6
2505 B6
2506 B6
2507 B6
2508 B6
2509 B6
2510 B6
2511 B6
2512 B7
2513 B7
2514 B7
2515 B7
2516 B7
2517 B7
2526 A7
2531 B5
2532 B4
2533 A4
2566 D1
2580 A2
2581 A3
2582 A3
2583 A3
2584 A3
2585 A3
2586 A3
2587 A3
2588 A3
2601 C5
2607 C5
2608 C5
2609 C5
2610 C5
2612 C5
2613 C5
2614 C5
2615 C5
2616 C5
2617 C5
2618 C5
2619 C5
2620 C5
2621 C5
2622 C5
2623 C5
2624 C4
2627 C5
2628 C5
2629 C5
2630 C5
2631 C5
2632 C5
2633 C5
2634 C5
2635 C5
2636 C5
2701 B1
2702 C2
2703 B2
2704 B2
2705 B2
2706 B2
2707 B1
2710 B1
2711 B2
2712 A2
2713 A2
2714 A1
2715 B2
2716 C1
2718 A2
2719 A2
2720 A1
2735 A1
2736 A1
2737 A1
2738 A1
2739 B2
2740 C2
2741 A2
2742 A2
2743 B2
2744 B2
2746 A2
2747 A2
2748 A2
2749 A2
2750 A2
2811 C6
2812 C7
2815 C6
2816 C6
2817 C6
2821 C6
2822 C6
2823 C6
2827 C6
2828 C6
2829 C6
2832 C7
2835 C6
2836 C6
2841 C6
2842 C6
2844 C6
2845 C6
2846 C6
2847 C6
2848 C6
2849 C7
2850 C6
2851 C6
2872 A6
2876 A4
2877 A4
2878 A4
2879 A4
2880 A4
2881 A4
2883 A4
2884 A4
2885 A5
2886 A5
2887 A4
2889 A5
2910 A3
2959 A6
2961 A5
2962 A6
2993 A7
2995 B6
3000 B2
3005 B2
3006 B2
3008 B2
3009 C3
3010 B2
3012 B4
3013 C3
3020 A3
3021 A3
3022 A3
3023 B1
3024 B1
3025 C1
3026 C1
3027 C1
3028 C4
3029 A4
3030 B4
3031 B4
3032 B4
3033 C4
3034 B4
3035 B4
3036 B4
3037 B1
3038 B1
3039 A3
3040 B4
3048 B4
3054 B4
3055 C4
3056 B3
3057 B3
3058 A4
3059 B2
3063 C1
3064 C4
3065 C2
3066 C1
3067 B1
3068 B1
3069 B1
3070 B3
3071 C4
3072 B1
3073 B3
3074 C3
3075 B3
3077 A3
3078 B3
3079 B3
3080 B3
3081 B3
3082 B3
3083 B3
3084 D1
3088 B3
3089 B2
3091 B3
3092 B3
3093 B4
3094 B4
3096 B3
3097 B3
3098 B4
3251 A7
3259 A7
3260 A7
3270 A7
3271 A7
3273 A7
3274 A7
3302 D1
3303 D1
3304 D2
3305 D2
3309 D1
3311 D1
3313 C3
3314 C2
3315 C3
3316 C2
3317 C3
3319 C2
3320 C2
3321 C2
3322 C2
3323 C2
3324 C2
3325 C2
3326 C2
3327 C1
3328 D2
3329 D2
3340 A3
3342 A3
3343 A3
3344 A3
3345 A4
3346 A3
3347 A3
3348 A3
3349 A4
3357 B3
3358 C3
3360 C4
3361 C4
3362 C4
3363 C4
3365 C4
3366 B4
3367 B4
3368 C4
3369 C4
3370 C3
3373 C4
3389 B3
3390 C3
3391 C3
3392 C3
3393 C3
3394 B2
3415 C1
3416 B6
3417 B6
3418 B5
3422 B6
3423 B5
3424 B5
3425 B5
3426 B5
3427 B6
3428 B5
3429 B5
3432 B5
3433 B5
3436 B5
3437 B5
3438 B5
3439 B5
3440 B5
3442 C5
3443 B5
3444 B6
3446 B5
3448 B5
3460 B5
3501 B7
3502 B7
3503 B7
3531 B5
3532 B4
3533 B4
3534 B4
3536 A5
3538 A4
3539 A4
3540 A5
3541 A5
3542 A5
3543 A5
3544 A5
3545 A4
3546 A5
3547 A5
3548 A5
3549 A5
3550 A4
3551 A5
3552 A5
3553 A5
3579 C1
3580 A3
3581 A3
3601 C5
3612 C5
3613 C5
3614 C5
3615 C5
3616 C5
3617 C5
3618 C5
3619 C5
3620 C5
3625 C5
3626 C5
3627 C5
3628 C5
3629 C5
3630 C5
3631 C5
3632 C5
3633 C5
3641 C4
3642 C4
3643 C4
3644 C4
3645 C4
3646 C4
3705 C2
3706 B2
3707 B2
3709 B2
3710 B2
3711 B1
3714 A2
3715 A2
3716 B2
3717 C2
3718 B2
3719 C2
3720 C2
3721 B2
3722 C2
3725 C2
3726 A2
3727 A2
3728 B3
3735 A1
3736 A1
3737 A1
3738 A1
3739 B2
3740 B2
3741 B2
3742 B2
3743 B2
3744 C1
3745 B2
3746 B2
3747 B2
3748 B2
3749 B2
3750 B2
3751 C1
3752 A2
3753 A2
3808 C7
3809 C7
3810 C7
3815 C6
3816 C6
3817 C6
3819 C6
3822 C7
3823 C7
3827 C6
3828 C7
3829 C6
3832 C7
3833 C6
3836 C6
3837 C6
3838 C6
3839 C6
3876 A4
3877 A4
3879 A4
3883 A4
3885 A5
3886 A4
3887 A4
3910 A3
3911 A3
3955 A5
3958 A5
4002 C3
4004 C3
4005 C3
4006 C3
4007 C3
4008 B4
4011 C4
4012 C4
4015 A3
4016 A4
4017 C1
4018 C1
4019 C1
4020 C1
4022 C2
4023 C3
4085 B1
4086 B1
4251 A7
4255 A7
4312 C2
4313 C3
4318 C3
4327 C2
4328 C2
4329 C2
4330 C2
4331 C2
4332 C2
4333 C2
4334 C2
4336 C2
4337 B2
4338 B2
4339 D1
4340 D1
4360 C4
4361 C4
4362 B4
4363 B4
4427 B6
4428 B6
4444 B6
4445 B6
4446 B5
4580 A3
4581 A3
4583 A3
4584 A3
4585 A3
4587 A3
4588 A3
4589 A3
4590 A3
4591 A3
4592 A3
4593 A3
4601 C5
4602 C5
4603 C5
4604 C5
4605 C5
4606 C5
4607 C5
4608 C5
4701 B2
4702 B2
4703 B1
4704 B2
4705 B2
4706 B2
4707 B2
4708 B3
4709 B3
4710 B2
4711 B2
4716 B3
4720 A1
4836 C6
4838 C6
4871 A6
4872 A6
4887 A4
4888 A6
5001 B2
5002 B2
5004 B4
5005 B4
5006 C5
5007 B4
5008 B4
5010 B4
5060 B2
5066 C1
5067 D1
5070 B3
5071 B3
5251 A7
5252 A7
5257 A7
5258 A7
5259 A7
5304 D2
5309 C2
5321 C2
5324 C2
5339 B2
5340 C2
5360 B4
5370 B4
5371 B4
5372 B4
5580 A3
5601 C5
5607 C5
5720 A1
5721 A2
5722 A2
5735 A1
5736 A1
5803 C6
5872 A6
5910 A4
5920 A4
5932 A3
5955 A5
5956 A5
5957 A6
5959 A6
6000 B4
6001 B4
6002 B4
6003 B4
6004 B4
6005 B4
6006 B4
6007 B4
6008 B4
6009 B4
6010 B4
6011 B4
6012 B4
6013 B4
6014 B4
6015 B4
6016 B4
6017 B4
6018 B4
6019 B4
6020 A3
6021 A3
6022 A3
6023 A3
6024 A3
6025 A3
6026 A3
6027 A3
6028 A3
6029 A3
6030 A3
6031 A3
6032 A3
6033 A3
6034 A3
6035 A3
6036 A3
6037 A3
6038 A3
6039 A3
6040 A3
6041 A3
6042 A3
6043 A3
6044 A3
6045 A3
6046 A3
6047 A3
6048 A3
6049 A3
6050 A3
6051 A3
6052 A3
6053 A3
6054 A3
6055 A3
6056 A3
6057 A3
6058 A3
6059 A3
6060 A3
6061 A3
6062 A3
6063 A3
6064 A3
6065 A3
6066 A3
6067 A3
6068 A3
6069 A3
6070 A3
6071 A3
6072 A3
6073 A3
6074 A3
6075 B3
6076 A3
6259 A7
6260 A7
6261 A7
6262 A7
6270 A7
6271 A7
6272 A7
6273 A7
6274 A7
6275 A7
6276 A7
6277 A7
6278 A7
6279 A7
6280 A7
6281 A7
6282 A7
6283 A7
6284 A7
6285 A7
6286 A7
6287 A7
6288 A7
6289 A7
6290 A7
6291 A7
6292 A7
6293 A7
6294 A7
6295 A7
6296 A7
6297 A7
6298 A7
6299 A7
6300 A7
6301 A7
6302 A7
6303 A7
6304 A7
6305 A7
6306 A7
6307 A7
6308 A7
6309 A7
6310 A7
6311 D1
6323 C2
6324 C2
6328 A7
6329 A7
6330 A7
6331 A7
6510 A7
6511 A7
6512 A7
6513 A7
6514 A7
6515 A7
6516 A7
6517 A7
6518 A7
6519 A7
6520 A7
6521 A7
6522 A7
6523 A7
6524 A7
6525 A7
6526 A7
6527 A7
6528 A7
6529 A7
6530 A7
6531 A7
6532 A7
6533 A7
6534 A7
6535 A7
6536 A7
6537 A7
6538 A7
6539 A7
6540 A7
6541 A7
6542 A7
6543 A7
6544 A7
6545 A7
6546 A7
6547 A7
6548 A7
6549 A7
6550 A7
6551 A7
6552 A7
6553 A7
6554 A7
6555 A7
6556 A7
6557 A7
6558 A7
6559 A7
6560 A7
6561 A7
6562 A7
6563 A7
6564 A7
6565 A7
6566 A7
6567 A7
6568 A7
6569 A7
6570 A7
6571 A7
6572 A7
6573 A7
6574 A7
6575 A7
6576 A7
6577 A7
6578 A7
6579 A7
6580 A7
6581 A7
6582 A7
6583 A7
6584 A7
6585 A7
6586 A7
6587 A7
6588 A7
6589 A7
6590 A7
6591 A7
6592 A7
6593 A7
6594 A7
6595 A7
6596 A7
6597 A7
6598 A7
6599 A7
6600 A7
6601 A7
6602 A7
6603 A7
6604 A7
6605 A7
6606 A7
6607 A7
6608 A7
6609 A7
6610 A7
6611 A7
6612 A7
6613 A7
6614 A7
6615 A7
6616 A7
6617 A7
6618 A7
6619 A7
6620 A7
6621 A7
6622 A7
6623 A7
6624 A7
6625 A7
6626 A7
6627 A7
6628 A7
6629 A7
6630 A7
6631 A7
6632 A7
6633 A7
6634 A7
6635 A7
6636 A7
6637 A7
6638 A7
6639 A7
6640 A7
6641 A7
6642 A7
6643 A7
6644 A7
6645 A7
6646 A7
6647 A7
6648 A7
6649 A7
6650 A7
6651 A7
6652 A7
6653 A7
6654 A7
6655 A7
6656 A7
6657 A7
6658 A7
6659 A7
6660 A7
6661 A7
6662 A7
6663 A7
6664 A7
6665 A7
6666 A7
6667 A7
6668 A7
6669 A7
6670 A7
6671 A7
6672 A7
6673 A7
6674 A7
6675 A7
6676 A7
6677 A7
6678 A7
6679 A7
6680 A7
6681 A7
6682 A7
6683 A7
6684 A7
6685 A7
6686 A7
6687 A7
6688 A7
6689 A7
6690 A7
6691 A7
6692 A7
6693 A7
6694 A7
6695 A7
6696 A7
6697 A7
6698 A7
6699 A7
6700 A7
6701 A7
6702 A7
6703 A7
6704 A7
6705 A7
6706 A7
6707 A7
6708 A7
6709 A7
6710 A7
6711 A7
6712 A7
6713 A7
6714 A7
6715 A7
6716 A7
6717 A7
6718 A7
6719 A7
6720 A7
6721 A7
6722 A7
6723 A7
6724 A7
6725 A7
6726 A7
6727 A7
6728 A7
6729 A7
6730 A7
6731 A7
6732 A7
6733 A7
6734 A7
6735 A7
6736 A7
6737 A7
6738 A7
6739 A7
6740 A7
6741 A7
6742 A7
6743 A7
6744 A7
6745 A7
6746 A7
6747 A7
6748 A7
6749 A7
6750 A7
6751 A7
6752 A7
6753 A7
6754 A7
6755 A7
6756 A7
6757 A7
6758 A7
6759 A7
6760 A7
6761 A7
6762 A7
6763 A7
6764 A7
6765 A7
6766 A7
6767 A7
6768 A7
6769 A7
6770 A7
6771 A7
6772 A7
6773 A7
6774 A7
6775 A7
6776 A7
6777 A7
6778 A7
6779 A7
6780 A7
6781 A7
6782 A7
6783 A7
6784 A7
6785 A7
6786 A7
6787 A7
6788 A7
6789 A7
6790 A7
6791 A7
6792 A7
6793 A7
6794 A7
6795 A7
6796 A7
6797 A7
6798 A7
6799 A7
6800 A7
6801 A7
6802 A7
6803 A7
6804 A7
6805 A7
6806 A7
6807 A7
6808 A7
6809 A7
6810 A7
6811 A7
6812 A7
6813 A7
6814 A7
6815 A7
6816 A7
6817 A7
6818 A7
6819 A7
6820 A7
6821 A7
6822 A7
6823 A7
6824 A7
6825 A7
6826 A7
6827 A7
6828 A7
6829 A7
6830 A7
6831 A7
6832 A7
6833 A7
6834 A7
6835 A7
6836 A7
6837 A7
6838 A7
6839 A7
6840 A7
6841 A7
6842 A7
6843 A7
6844 A7
6845 A7
6846 A7
6847 A7
6848 A7
6849 A7
6850 A7
6851 A7
6852 A7
6853 A7
6854 A7
6855 A7
6856 A7
6857 A7
6858 A7
6859 A7
6860 A7
6861 A7
6862 A7
6863 A7
6864 A7
6865 A7
6866 A7
6867 A7
6868 A7
6869 A7
6870 A7
6871 A7
6872 A7
6873 A7
6874 A7
6875 A7
6876 A7
6877 A7
6878 A7
6879 A7
6880 A7
6881 A7
6882 A7
6883 A7
6884 A7
6885 A7
6886 A7
6887 A7
6888 A7
6889 A7
6890 A7
6891 A7
6892 A7
6893 A7
6894 A7
6895 A7
6896 A7
6897 A7
6898 A7
6899 A7
6900 A7
6901 A7
6902 A7
6903 A7
6904 A7
6905 A7
6906 A7
6907 A7
6908 A7
6909 A7
6910 A7
6911 A7
6912 A7
6913 A7
6914 A7
6915 A7
6916 A7
6917 A7
6918 A7
6919 A7
6920 A7
6921 A7
6922 A7
6923 A7
6924 A7
6925 A7
6926 A7
6927 A7
6928 A7
6929 A7
6930 A7
6931 A7
6932 A7
6933 A7
6934 A7
6935 A7
6936 A7
6937 A7
6938 A7
6939 A7
6940 A7
6941 A7
6942 A7
6943 A7
6944 A7
6945 A7
6946 A7
6947 A7
6948 A7
6949 A7
6950 A7
6951 A7
6952 A7
6953 A7
6954 A7
6955 A7
6956 A7
6957 A7
6958 A7
6959 A7
6960 A7
6961 A7
6962 A7
6963 A7
6964 A7
6965 A7
6966 A7
6967 A7
6968 A7
6969 A7
6970 A7
6971 A7
6972 A7
6973 A7
6974 A7
6975 A7
6976 A7
6977 A7
6978 A7
6979 A7
6980 A7
6981 A7
6982 A7
6983 A7
6984 A7
6985 A7
6986 A7
6987 A7
6988 A7
6989 A7
6990 A7
6991 A7
6992 A7
6993 A7
6994 A7
6995 A7
6996 A7
6997 A7
6998 A7
6999 A7
7000 A7
7001 A7
7002 A7
7003 A7
7004 A7
7005 A7
7006 A7
7007 A7
7008 A7
7009 A7
7010 A7
7011 A7
7012 A7
7013 A7
7014 A7
7015 A7
7016 A7
7017 A7
7018 A7
7019 A7
7020 A7
7021 A7
7022 A7
7023 A7
7024 A7
7025 A7
7026 A7
7027 A7
7028 A7
7029 A7
7030 A7
7031 A7
7032 A7
7033 A7
7034 A7
7035 A7
7036 A7
7037 A7
7038 A7
7039 A7
7040 A7
7041 A7
7042 A7
7043 A7
7044 A7
7045 A7
7046 A7
7047 A7
7048 A7
7049 A7
7050 A7
7051 A7
7052 A7
7053 A7
7054 A7
7055 A7
7056 A7
7057 A7
7058 A7
7059 A7
7060 A7
7061 A7
7062 A7
7063 A7
7064 A7
7065 A7
7066 A7
7067 A7
7068 A7
7069 A7
7070 A7
7071 A7
7072 A7
7073 A7
7074 A7
7075 A7
7076 A7
7077 A7
7078 A7
7079 A7
7080 A7
7081 A7
7082 A7
7083 A7
7084 A7
7085 A7
7086 A7
7087 A7
7088 A7
7089 A7
7090 A7
7091 A7
7092 A7
7093 A7
7094 A7
7095 A7
7096 A7
7097 A7
7098 A7
7099 A7
7100 A7
7101 A7
7102 A7
7103 A7
7104 A7
7105 A7
7106 A7
7107 A7
7108 A7
7109 A7
7110 A7
7111 A7
7112 A7
7113 A7
7114 A7
7115 A7
7116 A7
7117 A7
7118 A7
7119 A7
7120 A7
7121 A7
7122 A7
7123 A7
7124 A7
7125 A7
7126 A7
7127 A7
7128 A7
7129 A7
7130 A7
7131 A7
7132 A7
7133 A7
7134 A7
7135 A7
7136 A7
7137 A7
7138 A7
7139 A7
7140 A7
7141 A7
7142 A7
7143 A7
7144 A7
7145 A7
7146 A7
7147 A7
7148 A7
7149 A7
7150 A7
7151 A7
7152 A7
7153 A7
7154 A7
7155 A7
7156 A7
7157 A7
7158 A7
7159 A7
7160 A7
7161 A7
7162 A7
7163 A7
7164 A7
7165 A7
7166 A7
7167 A7
7168 A7
7169 A7
7170 A7
7171 A7
7172 A7
7173 A7
7174 A7
7175 A7
7176 A7
7177 A7
7178 A7
7179 A7
7180 A7
7181 A7
7182 A7
7183 A7
7184 A7
7185 A7
7186 A7
7187 A7
7188 A7
7189 A7
7190 A7
7191 A7
7192 A7
7193 A7
7194 A7
7195 A7
7196 A7
7197 A7
7198 A7
7199 A7
7200 A7
7201 A7
7202 A7
7203 A7
7204 A7
7205 A7
7206 A7
7207 A7
7208 A7
7209 A7
7210 A7
7211 A7
7212 A7
7213 A7
7214 A7
7215 A7
7216 A7
7217 A7
7218 A7
7219 A7
7220 A7
7221 A7
7222 A7
7223 A7
7224 A7
7225 A7
7226 A7
7227 A7
7228 A7
7229 A7
7230 A7
7231 A7
7232 A7
7233 A7
7234 A7
7235 A7
7236 A7
7237 A7
7238 A7
7239 A7
7240 A7
7241 A7
7242 A7
7243 A7
7244 A7
7245 A7
7246 A7
7247 A7
7248 A7
7249 A7
7250 A7
7251 A7
7252 A7
7253 A7
7254 A7
7255 A7
7256 A7
7257 A7
7258 A7
7259 A7
7260 A7
7261 A7
7262 A7
7263 A7
7264 A7
7265 A7
7266 A7
7267 A7
7268 A7
7269 A7
7270 A7
7271 A7
7272 A7
7273 A7
7274 A7
7275 A7
7276 A7
7277 A7
7278 A7
7279 A7
7280 A7
7281 A7
7282 A7
7283 A7
7284 A7
7285 A7
7286 A7
7287 A7
7288 A7
7289 A7
7290 A7
7291 A7
7292 A7
7293 A7
7294 A7
7295 A7
7296 A7
7297 A7
7298 A7
7299 A7
7300 A7
7301 A7
7302 A7
7303 A7
7304 A7
7305 A7
7306 A7
7307 A7
7308 A7
7309 A7
7310 A7
7311 A7
7312 A7
7313 A7
7314 A7
7315 A7
7316 A7
7317 A7
7318 A7
7319 A7
7320 A7
7321 A7
7322 A7
7323 A7
7324 A7
7325 A7
7326 A7
7327 A7
7328 A7
7329 A7
7330 A7
7331 A7
7332 A7
7333 A7
7334 A7
7335 A7
7336 A7
7337 A7
7338 A7
7339 A7
7340 A7
7341 A7
7342 A7
7343 A7
7344 A7
7345 A7
7346 A7
7347 A7
7348 A7
7349 A7
7350 A7
7351 A7
7352 A7
7353 A7
7354 A7
7355 A7
7356 A7
7357 A7
7358 A7
7359 A7
7360 A7
7361 A7
7362 A7
7363 A7
7364 A7
7365 A7
7366 A7
7367 A7
7368 A7
7369 A7
7370 A7
7371 A7
7372 A7
7373 A7
7374 A7
7375 A7
7376 A7
7377 A7
7378 A7
7379 A7
7380 A7
7381 A7
7382 A7
7383 A7
7384 A7
7385 A7
7386 A7
7387 A7
7388 A7
7389 A7
7390 A7
7391 A7
7392 A7
7393 A7
7394 A7
7395 A7
7396 A7
7397 A7
7398 A7
7399 A7
7400 A7
7401 A7
7402 A7
7403 A7
7404 A7
7405 A7
7406 A7
7407 A7
7408 A7
7409 A7
7410 A7
7411 A7
7412 A7
7413 A7
7414 A7
7415 A7
7416 A7
7417 A7
7418 A7
7419 A7
7420 A7
7421 A7
7422 A7
7423 A7
7424 A7
7425 A7
7426 A7
7427 A7
7428 A7
7429 A7
7430 A7
7431 A7
7432 A7
7433 A7
7434 A7
7435 A7
7436 A7
7437 A7
7438 A7
7439 A7
7440 A7
7441 A7
7442 A7
7443 A7
7444 A7
7445 A7
7446 A7
7447 A7
7448 A7
7449 A7
7450 A7
7451 A7
7452 A7
7453 A7
7454 A7
7455 A7
7456 A7
7457 A7
7458 A7
7459 A7
7460 A7
7461 A7
7462 A7
7463 A7
7464 A7
7465 A7
7466 A7
7467 A7
7468 A7
7469 A7
7470 A7
7471 A7
7472 A7
7473 A7
7474 A7
7475 A7
7476 A7
7477 A7
7478 A7
7479 A7
7480 A7
7481 A7
7482 A7
7483 A7
7484 A7
7485 A7
7486 A7
7487 A7
7488 A7
7489 A7
7490 A7
7491 A7
7492 A7
7493 A7
7494 A7
7495 A7
7496 A7
7497 A7
7498 A7
7499 A7
7500 A7
7501 A7
7502 A7
7503 A7
7504 A7
7505 A7
7506 A7
7507 A7
7508 A7
7509 A7
7510 A7
7511 A7
7512 A7
7513 A7
7514 A7
7515 A7
7516 A7
7517 A7
7518 A7
7519 A7
7520 A7
7521 A7
7522 A7
7523 A7
7524 A7
7525 A7
7526 A7
7527 A7
7528 A7
7529 A7
7530 A7
7531 A7
7532 A7
7533 A7
7534 A7
7535 A7
7536 A7
7537 A7
7538 A7
7539 A7
7540 A7
7541 A7
7542 A7
7543 A7
7544 A7
7545 A7
7546 A7
7547 A7
7548 A7
7549 A7
7550 A7
7551 A7
7552 A7
7553 A7
7554 A7
7555 A7
7556 A7
7557 A7
7558 A7
7559 A7
7560 A7
7561 A7
7562 A7
7563 A7
7564 A7
7565 A7
7566 A7
7567 A7
7568 A7
7569 A7
7570 A7
7571 A7
7572 A7
7573 A7
7574 A7
7575 A7
7576 A7
7577 A7
7578 A7
7579 A7
7580 A7
7581 A7
7582 A7
7583 A7
7584 A7
7585 A7
7586 A7
7587 A7
7588 A7
7589 A7
7590 A7
7591 A7
7592 A7
7593 A7
7594 A7
7595 A7
7596 A7
7597 A7
7598 A7
7599 A7
7600 A7
7601 A7
7602 A7
7603 A7
7604 A7
7605 A7
7606 A7
7607 A7
7608 A7
7609 A7
7610 A7
7611 A7
7612 A7
7613 A7
7614 A7
7615 A7
7616 A7
7617 A7
7618 A7
7619 A7
7620 A7
7621 A7
7622 A7
7623 A7
7624 A7
7625 A7
7626 A7
7627 A7
7628 A7
7629 A7
7630 A7
7631 A7
7632 A7
7633 A7
7634 A7
7635 A7
7636 A7
7637 A7
7638 A7
7639 A7
7640 A7
7641 A7
7642 A7
7643 A7
7644 A7
7645 A7
7646 A7
7647 A7
7648 A7
7649 A7
7650 A7
7651 A7
7652 A7
7653 A7
7654 A7
7655 A7
7656 A7
7657 A7
7658 A7
7659 A7
7660 A7
7661 A7
7662 A7
7663 A7
7664 A7
7665 A7
7666 A7
7667 A7
7668 A7
7669 A7
7670 A7
7671 A7
7672 A7
7673 A7
7674 A7
7675 A7
7676 A7
7677 A7
7678 A7
7679 A7
7680 A7
7681 A7
7682 A7
7683 A7
7684 A7
7685 A7
7686 A7
7687 A7
7688 A7
7689 A7
7690 A7
7691 A7
7692 A7
7693 A7
7694 A7
7695 A7
7696 A7
7697 A7
7698 A7
7699 A7
7700 A7
7701 A7
7702 A7
7703 A7
7704 A7
7705 A7
7706 A7
7707 A7
7708 A7
7709 A7
7710 A7
7711 A7
7712 A7
7713 A7
7714 A7
7715 A7
7716 A7
7717 A7
7718 A7
7719 A7
7720 A7
7721 A7
7722 A7
7723 A7
7724 A7
7725 A7
7726 A7
7727 A7
7728 A7
7729 A7
7730 A7
7731 A7
7732 A7
7733 A7
7734 A7
7735 A7
7736 A7
7737 A7
7738 A7
7739 A7
7740 A7
7741 A7
7742 A7
7743 A7
7744 A7
7745 A7
7746 A7
7747 A7
7748 A7
7749 A7
7750 A7
7751 A7
7752 A7
7753 A7
7754 A7
7755 A7
7756 A7
7757 A7
7758 A7
7759 A7
7760 A7
7761 A7
7762 A7
7763 A7
7764 A7
7765 A7
7766 A7
7767 A7
7768 A7
7769 A7
7770 A7
7771 A7
7772 A7
7773 A7
7774 A7
7775 A7
7776 A7
7777 A7
7778 A7
7779 A7
7780 A7
7781 A7
7782 A7
7783 A7
7784 A7
7785 A7
7786 A7
7787 A7
7788 A7
7789 A7
7790 A7
7791 A7
7792 A7
7793 A7
7794 A7
7795 A7
7796 A7
7797 A7
7798 A7
7799 A7
7800 A7
7801 A7
7802 A7
7803 A7
7804 A7
7805 A7
7806 A7
7807 A7
7808 A7
7809 A7
7810 A7
7811 A7
7812 A7
7813 A7
7814 A7
7815 A7
7816 A7
7817 A7
7818 A7
7819 A7
7820 A7
7821 A7
7822 A7
7823 A7
7824 A7
7825 A7
7826 A7
7827 A7
7828 A7
7829 A7
7830 A7
7831 A7
7832 A7
7833 A7
7834 A7
7835 A7
7836 A7
7837 A7
7838 A7
7839 A7
7840 A7
7841 A7
7842 A7
7843 A7
7844 A7
7845 A7
7846 A7
7847 A7
7848 A7
7849 A7
7850 A7
7851 A7
7852 A7
7853 A7
7854 A7
7855 A7
7856 A7
7857 A7
7858 A7
7859 A7
7860 A7
7861 A7
7862 A7
7863 A7
7864 A7
7865 A7
7866 A7
7867 A7
7868 A7
7869 A7
7870 A7
7871 A7
7872 A7
7873 A7
7874 A7
7875 A7
7876 A7
7877 A7
7878 A7
7879 A7
7880 A7
7881 A7
7882 A7
7883 A7
7884 A7
7885 A7
7886 A7
7887 A7
7888 A7
7889 A7
7890 A7
7891 A7
7892 A7
7893 A7
7894 A7
7895 A7
7896 A7
7897 A7
7898 A7
7899 A7
7900 A7
7901 A7
7902 A7
7903 A7
7904 A7
7905 A7
7906 A7
7907 A7
7908 A7
7909 A7
7910 A7
7911 A7
7912 A7
7913 A7
7914 A7
7915 A7
7916 A7
7917 A7
7918 A7
7919 A7
7920 A7
7921 A7
7922 A7
7923 A7
7924 A7
7925 A7
7926 A7
7927 A7
7928 A7
7929 A7
7930 A7
7931 A7
7932 A7
7933 A7
7934 A7
7935 A7
7936 A7
7937 A7
7938 A7
7939 A7
7940 A7
7941 A7
7942 A7
7943 A7
7944 A7
7945 A7
7946 A7
7947 A7
7948 A7
7949 A7
7950 A7
7951 A7
7952 A7
7953 A7
7954 A7
7955 A5
7956 A5
7957 A6
7959 A6
7960 A7
7961 A7
7962 A7
7963 A7
7964 A7
7965 A7
7966 A7
7967 A7
7968 A7
7969 A7
7970 A7
7971 A7
7972 A7
7973 A7
7974 A7
7975 A7
7976 A7
7977 A7
7978 A7
7979 A7
7980 A7
7981 A7
7982 A7
7983 A7
7984 A7
7985 A7
7986 A7
7987 A7
7988 A7
7989 A7
7990 A7
7991 A7
7992 A7
7993 A7
7994 A7
7995 A7
7996 A7
7997 A7
7998 A7
7999 A7
8000 A7
8001 A7
8002 A7
8003 A7
8004 A7
8005 A7
8006 A7
8007 A7
8008 A7
8009 A7
8010 A7
8011 A7
8012 A7
8013 A7
8014 A7
8015 A7
8016 A7
8017 A7
8018 A7
8019 A7
8020 A7
8021 A7
8022 A7
8023 A7
8024 A7
8025 A7
8026 A7
8027 A7
8028 A7
8029 A7
8030 A7
8031 A7
8032 A7
8033 A7
8034 A7
8035 A7
8036 A7
8037 A7
8038 A7
8039 A7
8040 A7
8041 A7
8042 A7
8043 A7
8044 A7
8045 A7
8046 A7
8047 A7
8048 A7
8049 A7
8050 A7
8051 A7
8052 A7
8053 A7
8054 A7
8055 A7
8056 A7
8057 A7
8058 A7
8059 A7
8060 A7
8061 A7
8062 A7
8063 A7
8064 A7
8065 A7
8066 A7
8067 A7
8068 A7
8069 A7
8070 A7
8071 A7
8072 A7
8073 A7
8074 A7
8075 A7
8076 A7
8077 A7
8078 A7
8079 A7
8080 A7
8081 A7
8082 A7
8083 A7
8084 A7
8085 A7
8086 A7
8087 A7
8088 A7
8089 A7
8090 A7
8091 A7
8092 A7
8093 A7
8094 A7
8095 A7
8096 A7
8097 A7
8098 A7
8099 A7
8100 A7
8101 A7
8102 A7
8103 A7
8104 A7
8105 A7
8106 A7
8107 A7
8108 A7
8109 A7
8110 A7
8111 A7
8112 A7
8113 A7
8114 A7
8115 A7
8116 A7
8117 A7
8118 A7
8119 A7
8120 A7
8121 A7
8122 A7
8123 A7
8124 A7
8125 A7
8126 A7
8127 A7
8128 A7
8129 A7
8130 A7
8131 A7
8132 A7
8133 A7
8134 A7
8135 A7
8136 A7
8137 A7
8138 A7
8139 A7
8140 A7
8141 A7
8142 A7
8143 A7
8144 A7
8145 A7
8146 A7
8147 A7
8148 A7
8149 A7
8150 A7
8151 A7
8152 A7
8153 A7
8154 A7
8155 A7
8156 A7
8157 A7
8158 A7
8159 A7
8160 A7
8161 A7
8162 A7
8163 A7
8164 A7
8165 A7
8166 A7
8167 A7
8168 A7
8169 A7
8170 A7
8171 A7
8172 A7
8173 A7
8174 A7
8175 A7
8176 A7
8177 A7
8178 A7
8179 A7
8180 A7
8181 A7
8182 A7
8183 A7
8184 A7
8185 A7
8186 A7
8187 A7
8188 A7
8189 A7
8190 A7
8191 A7
8192 A7
8193 A7
8194 A7
8195 A7
8196 A7
8197 A7
8198 A7
8199 A7
8200 A7
8201 A7
8202 A7
8203 A7
8204 A7
8205 A7
8206 A7
8207 A7
8208 A7
8209 A7
8210 A7
8211 A7
8212 A7
8213 A7
8214 A7
8215 A7
8216 A7
8217 A7
8218 A7
8219 A7
8220 A7
8221 A7
8222 A7
8223 A7
8224 A7
8225 A7
8226 A7
8227 A7
8228 A7
8229 A7
8230 A7
8231 A7
8232 A7
8233 A7
8234 A7
8235 A7
8236 A7
8237 A7
8238 A7
8239 A7
8240 A7
8241 A7
8242 A7
8243 A7
8244 A7
8245 A7
8246 A7
8247 A7
8248 A7
8249 A7
8250 A7
8251 A7
8252 A7
8253 A7
8254 A7
8255 A7
8256 A7
8257 A7
8258 A7
8259 A7
8260 A7
8261 A7
8262 A7
8263 A7
8264 A7
8265 A7
8266 A7
8267 A7
8268 A7
8269 A7
8270 A7
8271 A7
8272 A7
8273 A7
8274 A7
8275 A7
8276 A7
8277 A7
8278 A7
8279 A7
8280 A7
8281 A7
8282 A7
8283 A7
8284 A7
8285 A7
8286 A7
8287 A7
8288 A7

Layout Small Signal Panel (Bottom Side Part 1)

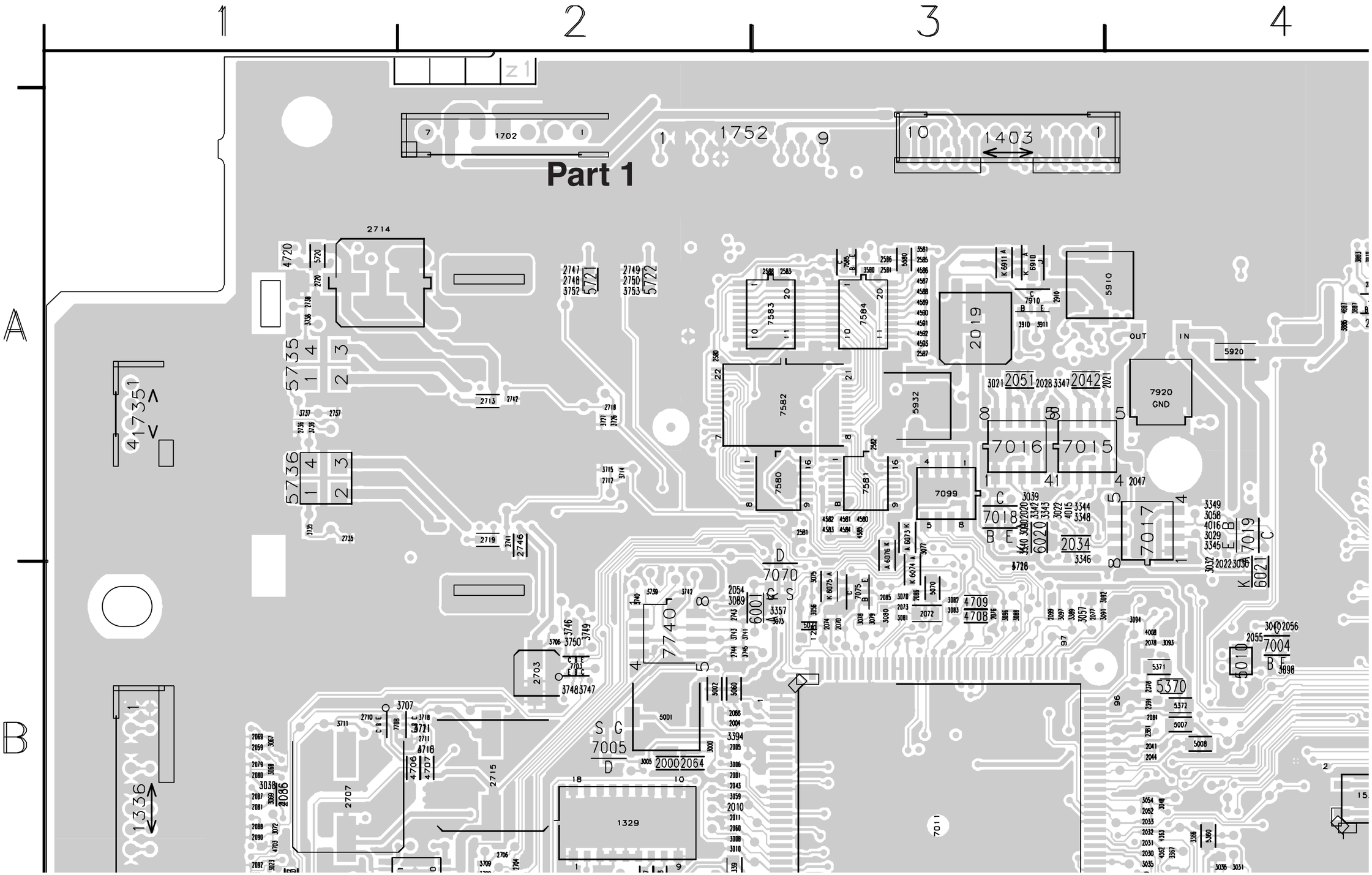

E_14710_035a.eps
070604

Layout Small Signal Panel (Bottom Side Part 2)

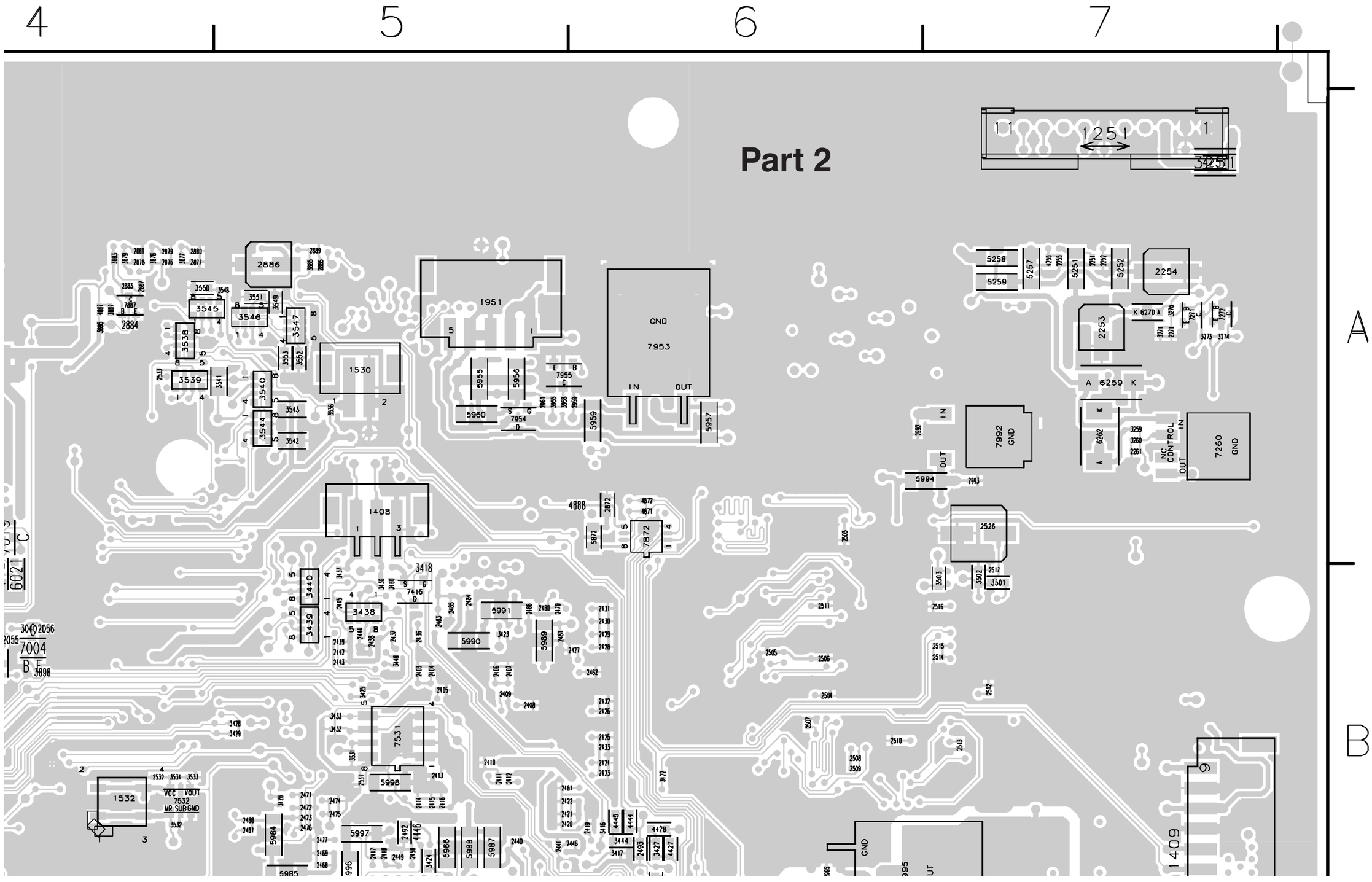

E_14710_035b.eps
070604

Layout Small Signal Panel (Bottom Side Part 3)

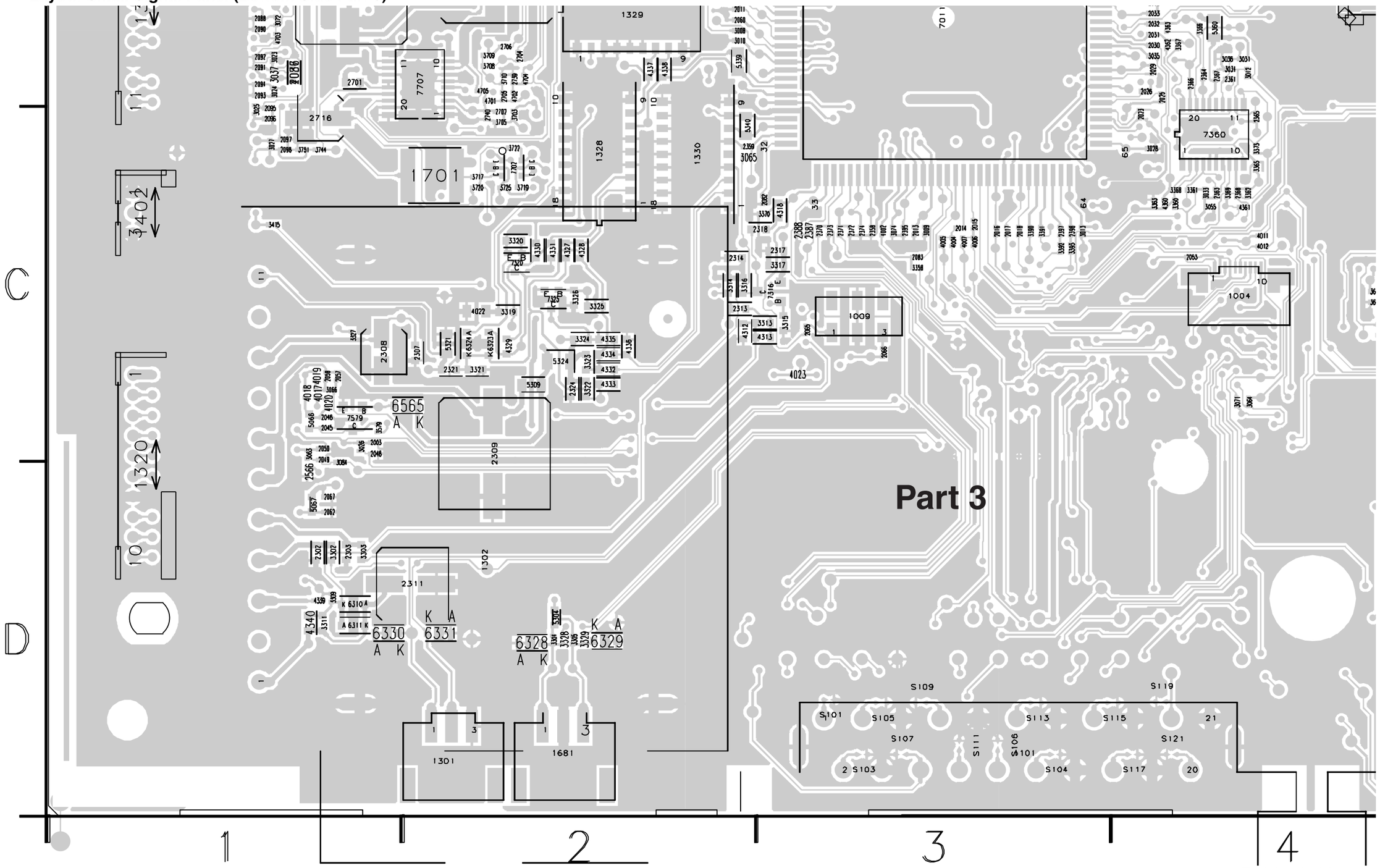

Layout Small Signal Panel (Bottom Side Part 4)

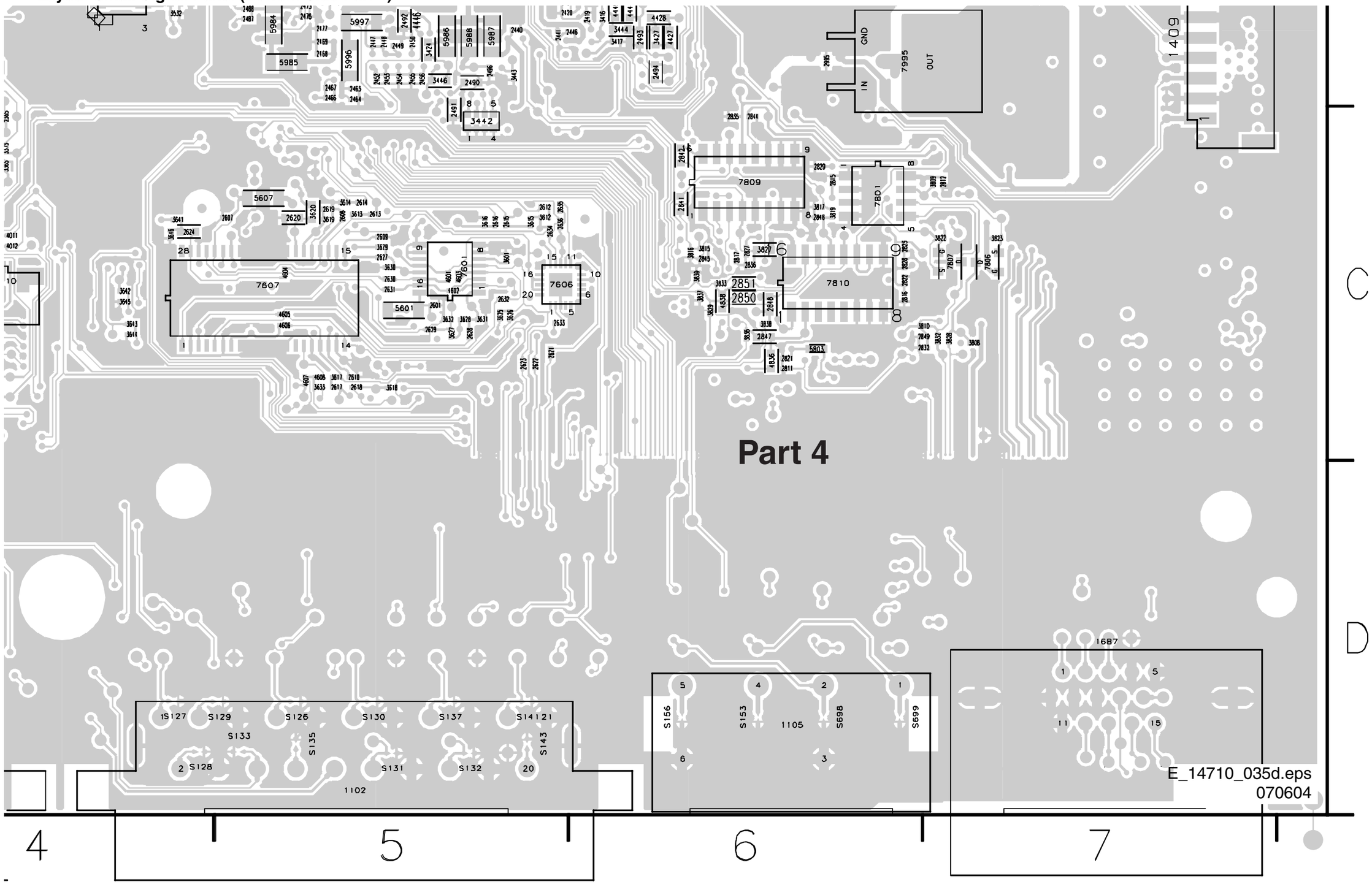

PDP Audio Panel

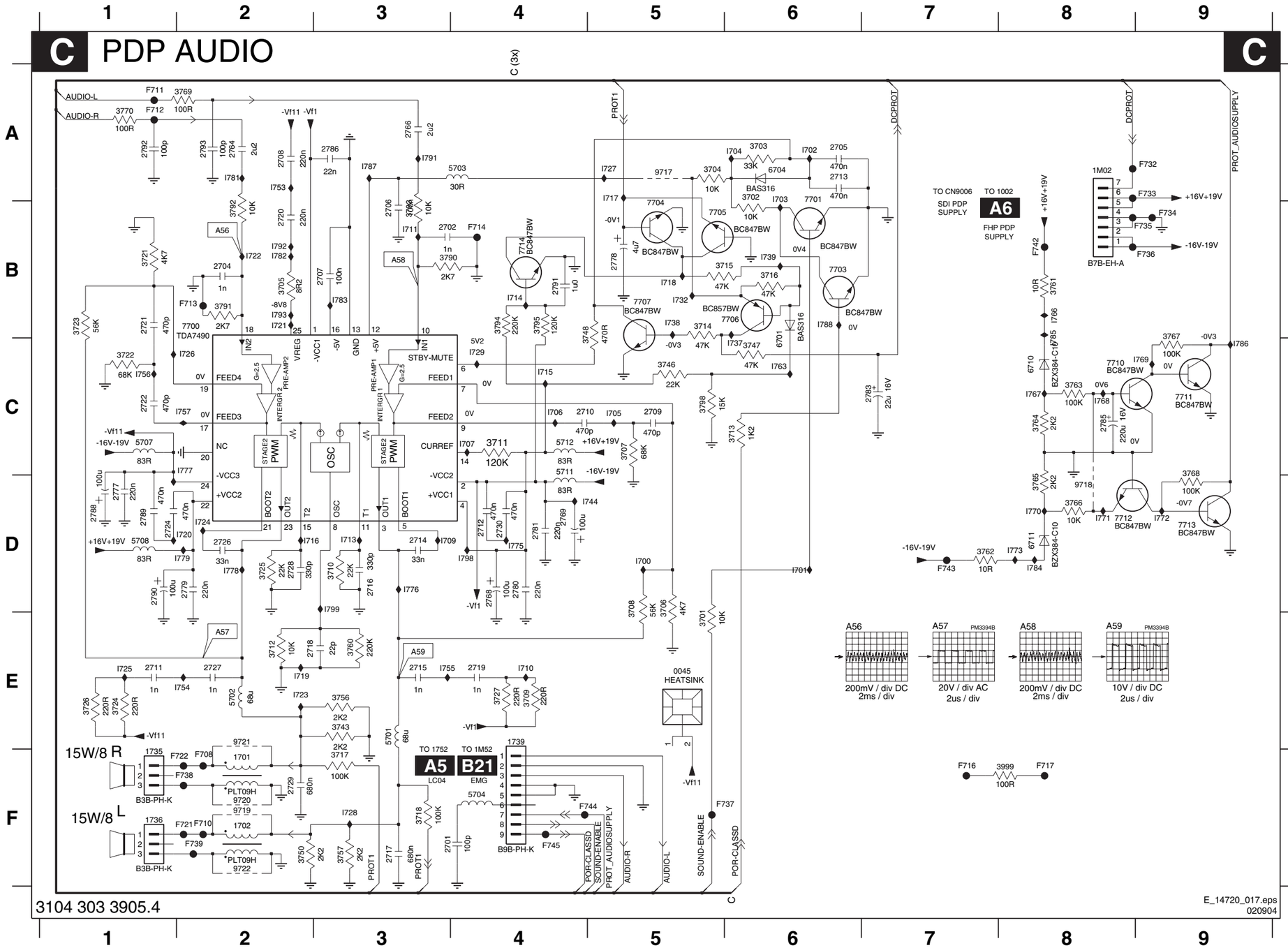

0045 E5	3761 B8	I717 A5
1701 F2	3762 D7	I718 B5
1702 F2	3763 C8	I719 E2
1735 F1	3764 C8	I720 D2
1736 F1	3765 D8	I721 B2
1739 E4	3766 D8	I722 B2
1M02 A8	3767 C9	I723 E2
2701 F3	3768 D9	I724 D2
2702 B3	3769 A2	I725 E1
2704 B2	3770 A1	I726 C2
2705 A6	3790 B3	I727 A5
2706 B3	3791 B2	I728 F3
2707 B3	3792 B2	I729 C4
2708 A2	3793 B3	I732 B5
2709 C5	3794 B4	I737 C6
2710 C4	3795 B4	I738 B5
2711 E1	3798 C5	I739 B6
2712 D4	3999 F8	I744 D5
2713 A6	5701 E3	I753 A2
2714 D3	5702 E2	I754 E2
2715 E3	5703 A4	I755 E3
2716 D3	5704 F4	I756 C1
2717 F3	5707 C1	I757 C2
2718 E2	5708 D1	I763 C6
2719 E4	5711 C4	I766 B8
2720 B2	5712 C4	I767 C8
2721 B1	6701 C6	I768 C8
2722 C1	6704 A6	I769 C9
2724 D1	6710 C8	I770 D8
2726 D2	6711 D8	I771 D8
2727 E2	7700 B2	I772 D9
2728 D2	7701 B6	I773 D8
2729 F2	7703 B6	I775 D4
2730 D4	7704 A5	I776 D3
2764 A2	7705 B6	I777 C2
2766 A3	7706 B6	I778 D2
2768 D4	7707 B5	I779 D2
2769 D4	7710 C8	I781 A2
2777 D1	7711 C9	I782 B2
2778 B5	7712 D8	I783 B3
2779 D2	7713 D9	I784 D8
2780 D4	7714 B4	I785 B8
2781 D4	9717 A5	I786 C9
2783 C7	9718 D8	I787 A3
2785 C8	9719 F2	I788 B6
2786 A3	9720 F2	I791 A3
2788 D1	9721 E2	I792 B2
2789 D1	9722 F2	I793 B2
2790 D1	F708 F2	I798 D4
2791 B4	F710 F2	I799 D3
2792 A1	F711 A1	
2793 A2	F712 A1	
3701 E5	F713 B2	
3702 A6	F714 B4	
3703 A6	F716 F7	
3704 A5	F717 F8	
3705 B2	F721 F2	
3706 D5	F722 F2	
3707 C5	F732 A9	
3708 D5	F733 A9	
3709 E4	F734 B9	
3710 D3	F735 B9	
3711 C4	F736 B9	
3712 E2	F737 F6	
3713 C6	F738 F2	
3714 B5	F739 F2	
3715 B5	F742 B8	
3716 B6	F743 D7	
3717 F3	F744 F5	
3718 F3	F745 F4	
3721 B1	I700 D5	
3722 C1	I701 D6	
3723 B1	I702 A6	
3724 E1	I703 A6	
3725 D2	I704 A6	
3726 E1	I705 C5	
3727 E4	I706 C4	
3743 E3	I707 C4	
3746 C5	I709 D3	
3747 C6	I710 E4	
3748 B5	I711 B3	
3750 F2	I713 D3	
3756 E3	I714 B4	
3757 F3	I715 C4	
3760 E3	I716 D2	

Layout PDP Audio Panel (Top Side)

0045 A1	1735 A4	1M02 A4	2768 A2	2783 A1	2790 A3	3748 A2	5707 A3	5712 A4	9702 A3	9705 A4	9708 A1	9711 A1	9719 A1	9722 A1
1701 A4	1736 A2	2717 A2	2769 A2	2785 A4	3711 A3	5701 A2	5708 A4	7700 A3	9703 A2	9706 A2	9709 A1	9712 A4	9720 A4	
1702 A1	1739 A1	2729 A4	2778 A1	2788 A3	3717 A2	5702 A3	5711 A2	9701 A4	9704 A2	9707 A2	9710 A1	9718 A4	9721 A4	

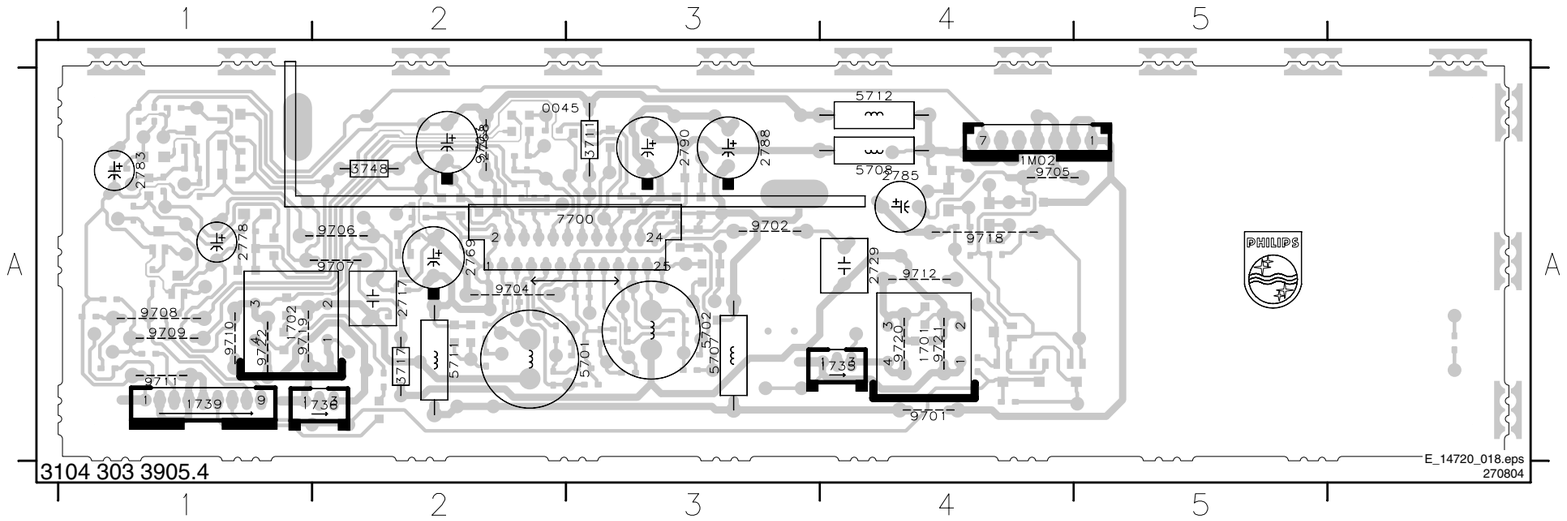

Layout PDP Audio Panel (Bottom Side)

0045 A4	2701 A4	2709 A4	2716 A3	2724 A3	2766 A4	2781 A4	2791 A4	3705 A3	3712 A4	3721 A3	3743 A2	3760 A4	3767 A2	3793 A4	5703 A5	6704 A5	7705 A5	7714 A4	9707 A4	9718 A2
1701 A2	2702 A4	2710 A4	2717 A4	2726 A3	2768 A4	2783 A5	2792 A5	3706 A3	3713 A5	3722 A3	3746 A5	3761 A2	3768 A2	3794 A4	5704 A4	6710 A2	7706 A5	9701 A2	9708 A5	9719 A5
1702 A5	2704 A3	2711 A3	2718 A4	2727 A3	2769 A4	2785 A2	2793 A5	3707 A3	3714 A5	3723 A3	3747 A5	3762 A2	3769 A5	3795 A4	5707 A3	6711 A2	7707 A5	9702 A3	9709 A5	9720 A2
1735 A2	2705 A5	2712 A4	2719 A4	2728 A3	2777 A3	2786 A4	3701 A5	3708 A4	3715 A5	3724 A3	3748 A4	3763 A2	3770 A5	3798 A5	5708 A2	7700 A4	7710 A2	9703 A4	9710 A5	9721 A2
1736 A4	2706 A3	2713 A5	2720 A3	2729 A2	2778 A5	2788 A3	3702 A5	3709 A4	3716 A5	3725 A3	3750 A5	3764 A2	3790 A4	3999 A1	5711 A4	7701 A5	7711 A2	9704 A4	9711 A5	9722 A5
1739 A5	2707 A3	2714 A4	2721 A3	2730 A4	2779 A3	2789 A3	3703 A5	3710 A3	3717 A4	3726 A3	3756 A2	3765 A2	3791 A3	5701 A4	5712 A2	7703 A5	7712 A1	9705 A2	9712 A2	
1M02 A2	2708 A3	2715 A4	2722 A3	2764 A4	2780 A4	2790 A3	3704 A5	3711 A3	3718 A4	3727 A4	3757 A5	3766 A2	3792 A4	5702 A3	6701 A5	7704 A5	7713 A2	9706 A4	9717 A5	

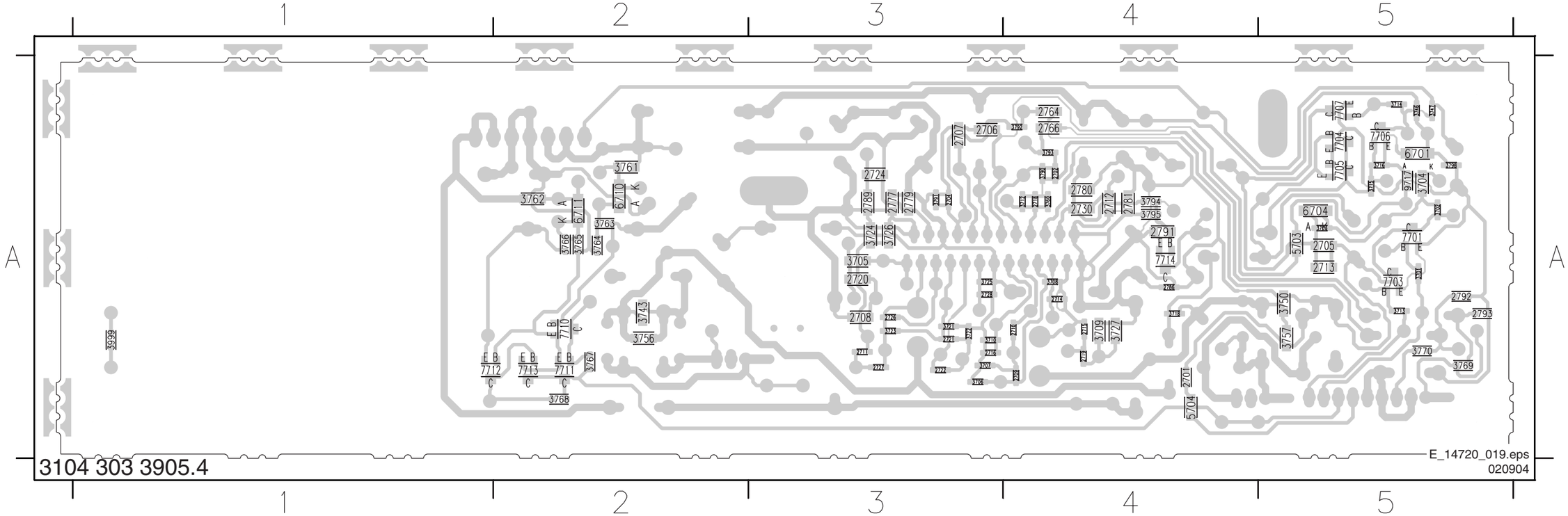

Side I/O Panel

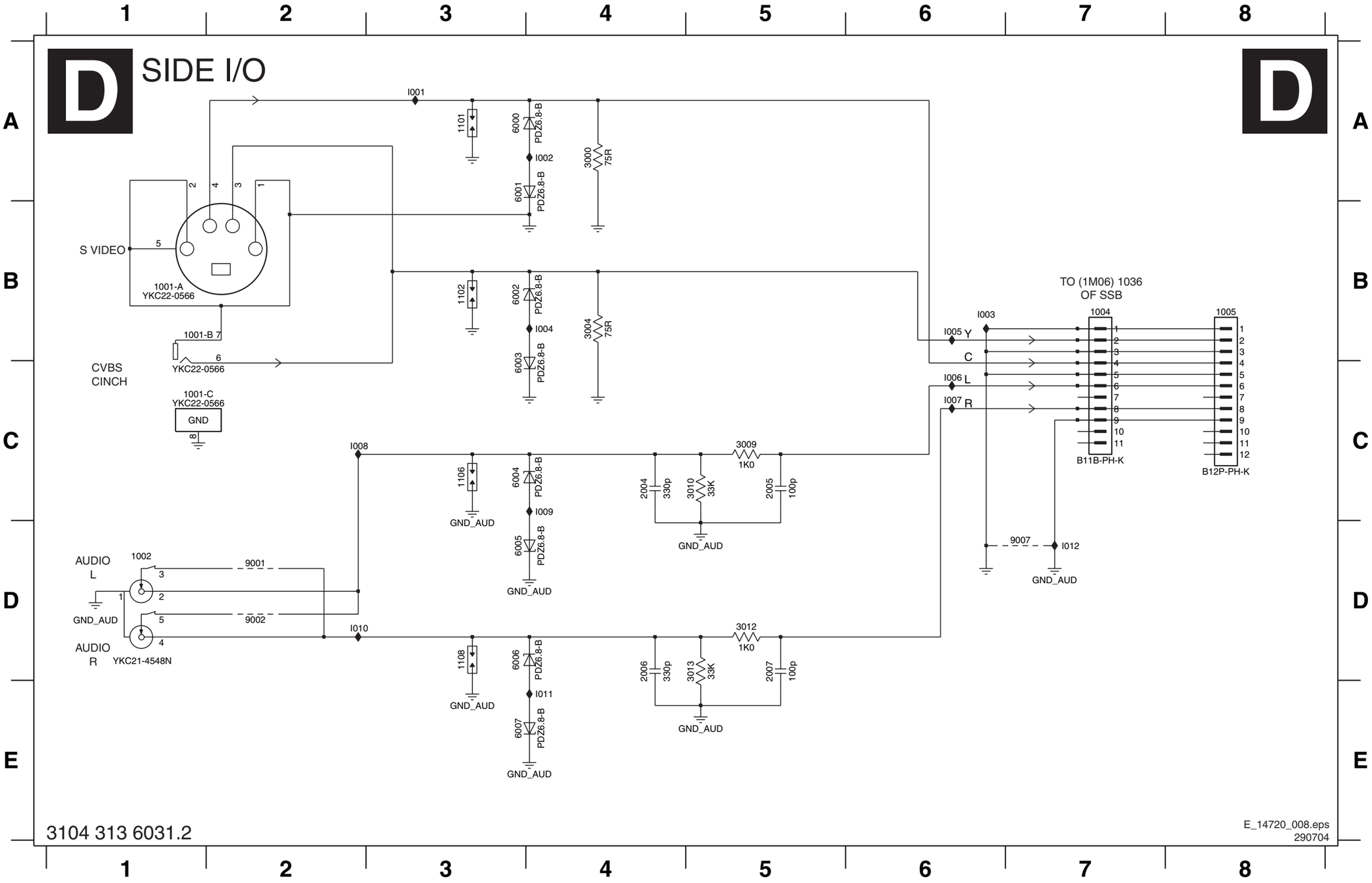

1001-A B1
1001-B B1
1001-C C1
1002 D1
1004 B7
1101 A3
1102 B3
1106 C3
1108 D3
2004 C4
2005 C5
2006 D4
2007 D5
3000 A4
3004 B4
3009 C5
3010 C5
3012 D5
3013 D5
6000 A3
6001 A3
6002 B3
6003 C3
6004 C3
6005 D3
6006 D3
6007 E3
9001 D2
9002 D2
9007 D7
I001 A3
I002 A4
I003 B6
I004 B4
I005 B6
I006 C6
I007 C6
I008 C2
I009 C4
I010 D2
I011 E4
I012 D7

Layout Side I/O Panel (Top Side)

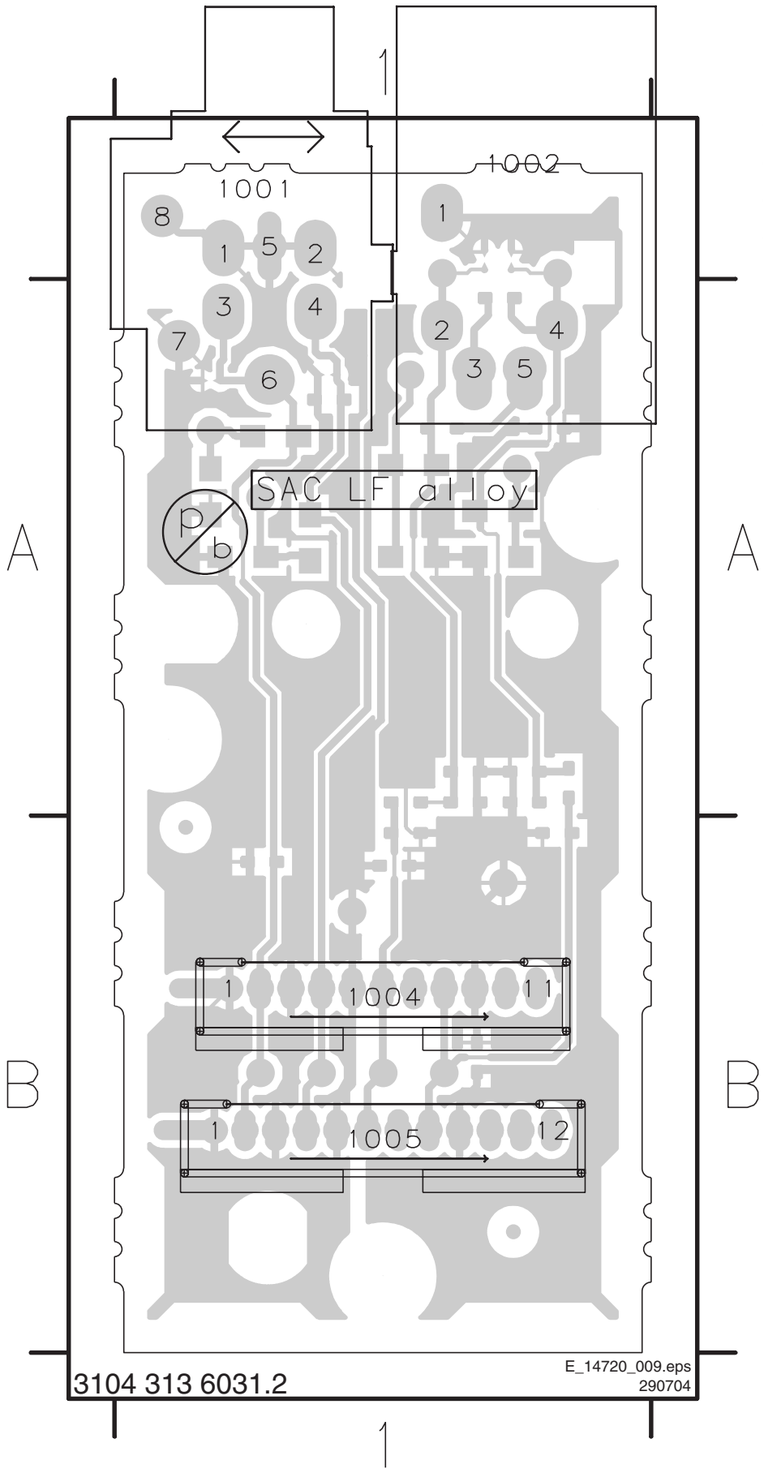

1001 A1
1002 A1
1004 B1
1005 B1

Layout Side I/O Panel (Bottom Side)

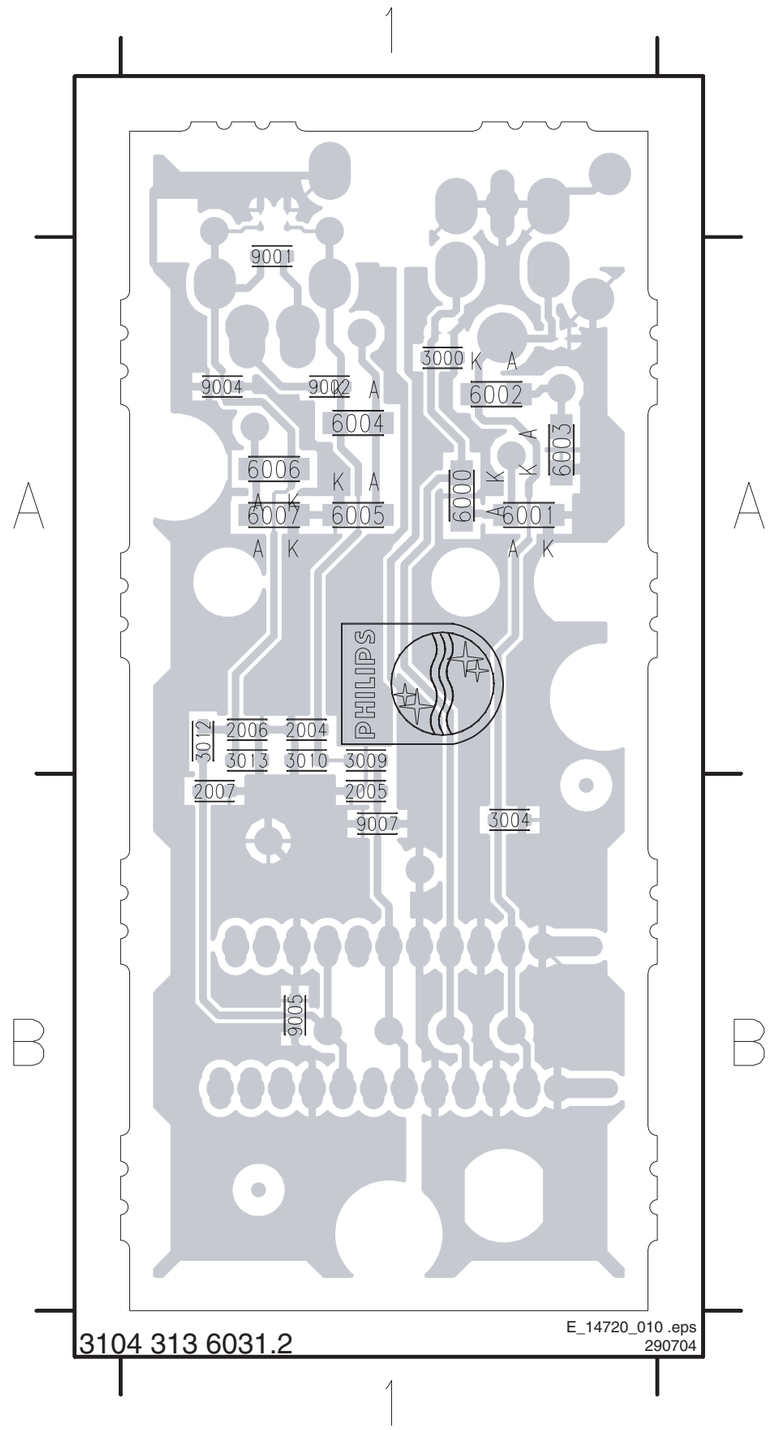

1001 A1
1002 A1
1004 B1
1005 B1
2004 A1
2005 B1
2006 A1
2007 B1
3000 A1
3004 B1
3009 A1
3010 A1
3012 A1
3013 A1
6000 A1
6001 A1
6002 A1
6003 A1
6004 A1
6005 A1
6006 A1
6007 A1
9001 A1
9002 A1
9004 A1
9005 B1
9007 B1

Top Control Panel

0345 A4	1704 D3	3003 E1	3007 E2	3011 E3	6005 E2	9004 E3	F702 D4	I704 D2	I708 E1
1701 D1	1705 D2	3004 E1	3008 D2	3012 C3	9001 D2	9005 C3	I701 C3	I705 E3	I709 E1
1702 D1	3001 E1	3005 E2	3009 E3	3013 C3	9002 E3	9006 C3	I702 D3	I706 E3	I710 A3
1703 D3	3002 E1	3006 E2	3010 D3	3999 D4	9003 D3	F701 D4	I703 D3	I707 E2	

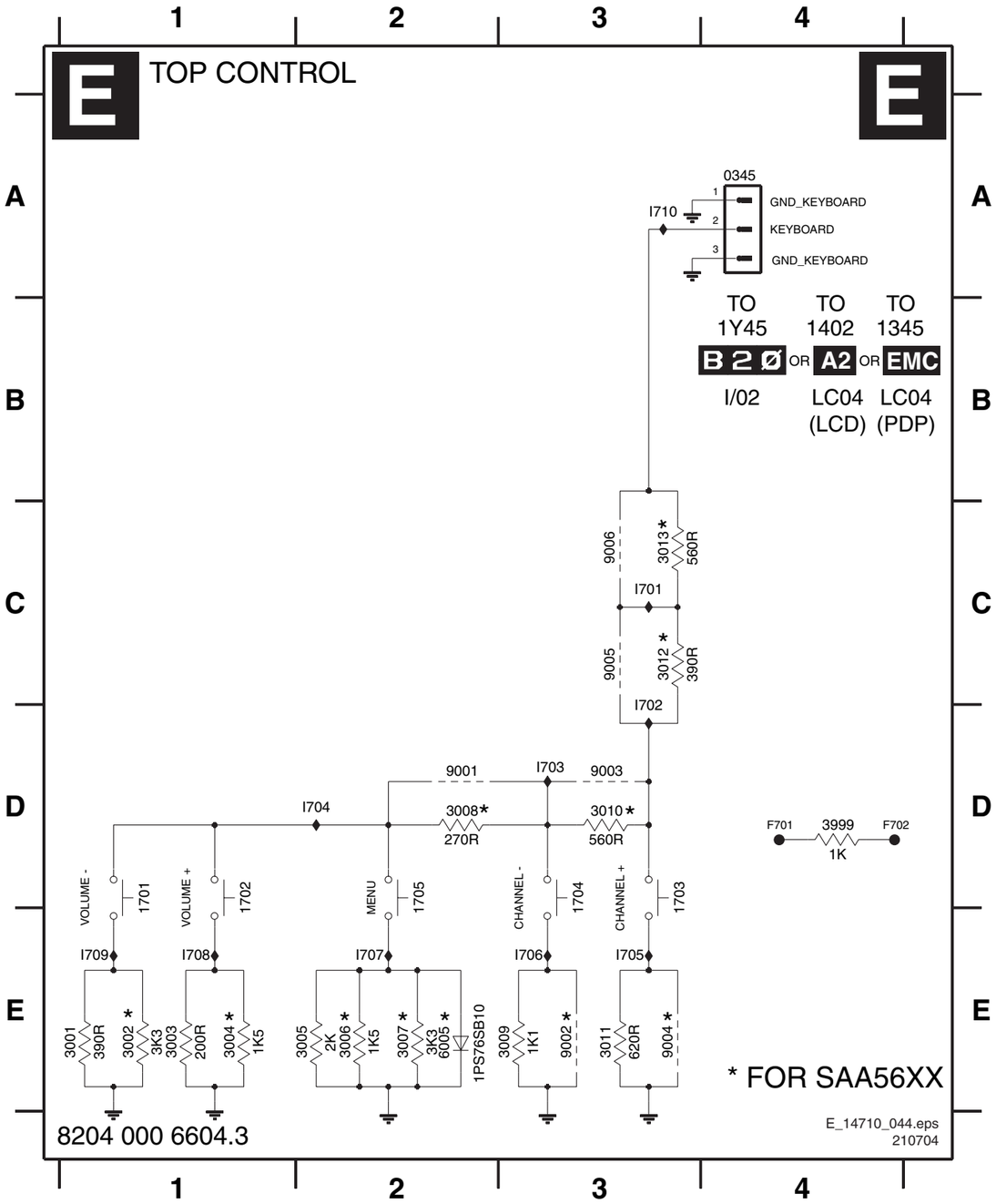

Personal Notes:

E_06532_012.eps

Layout Top Control Panel (Top Side)

0345 1701 1702 1703 1704 1705

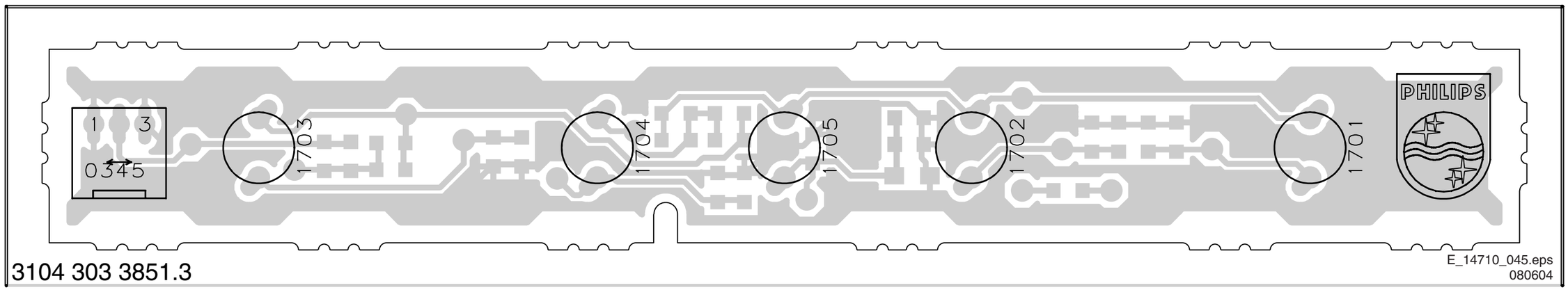

Layout Top Control Panel (Top Side)

3001 3003 3005 3007 3009 3011 3013 6005 9002 9004 9006
3002 3004 3006 3008 3010 3012 3999 9001 9003 9005

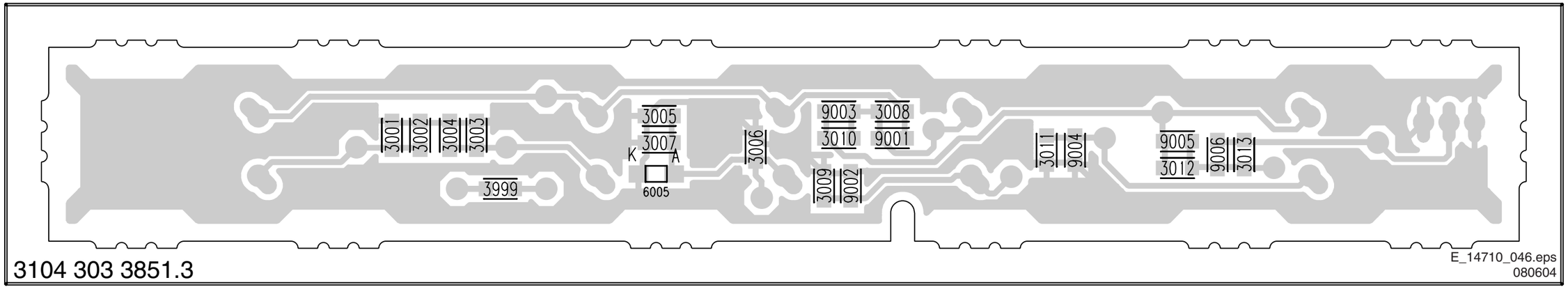

EMC Filter Panel

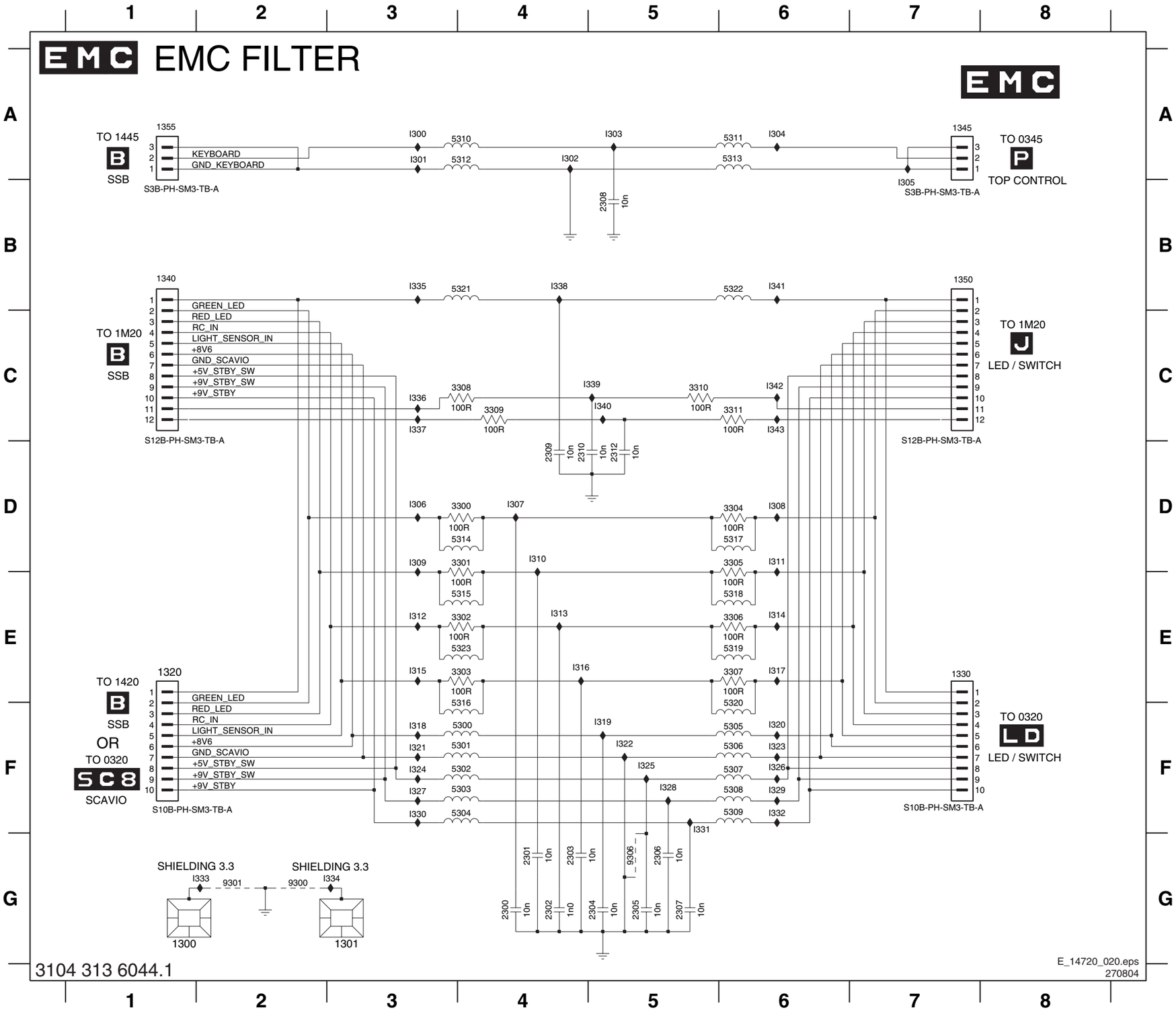

1300 G1
1301 G3
1320 E1
1330 E7
1340 B1
1345 A7
1350 B7
1355 A1
2300 G4
2301 G4
2302 G4
2303 G4
2304 G5
2305 G5
2306 G5
2307 G5
2308 B5
2309 D4
2310 D4
2312 D5
3300 D4
3301 D4
3302 E4
3303 E4
3304 D6
3305 D6
3306 E6
3307 E6
3308 C4
3309 C4
3310 C5
3311 C6
5300 F4
5301 F4
5302 F4
5303 F4
5304 F4
5305 F6
5306 F6
5307 F6
5308 F6
5309 F6
5310 A4
5311 A6
5312 A4
5313 A6
5314 D4
5315 E4
5316 F4
5317 D6
5318 E6
5319 E6
5320 F6
5321 B4
5322 B6
5323 E4
9300 G2
9301 G2
9306 G5
I300 A3
I301 A3
I302 A4
I303 A5
I304 A6
I305 B7
I306 D3
I307 D4
I308 D6
I309 D3
I310 D4
I311 D6
I312 E3
I313 E4
I314 E6
I315 E3
I316 E4
I317 E6
I318 F3
I319 F5
I320 F6
I321 F3
I322 F5
I323 F6
I324 F3
I325 F5
I326 F6
I327 F3
I328 F5
I329 F6
I330 F3
I331 F5
I332 F6
I333 G2
I334 G3
I335 B3
I336 C3
I337 C3
I338 B4
I339 C5
I340 C5
I341 B6
I342 C6
I343 C6

Layout EMC Filter Panel (Top Side)

1320 A2	2301 A1	2308 A2	3303 A1	3310 A2	5305 A1	5312 A2	5319 A1	9306 A2
1330 A1	2302 A1	2309 A1	3304 A1	3311 A2	5306 A1	5313 A2	5320 A1	
1340 A1	2303 A1	2310 A2	3305 A1	5300 A1	5307 A2	5314 A2	5321 A2	
1345 A2	2304 A1	2312 A2	3306 A1	5301 A1	5308 A2	5315 A1	5322 A1	
1350 A1	2305 A2	3300 A1	3307 A1	5302 A1	5309 A2	5316 A1	5323 A1	
1355 A2	2306 A2	3301 A1	3308 A1	5303 A1	5310 A2	5317 A1	9300 A1	
2300 A1	2307 A2	3302 A1	3309 A1	5304 A1	5311 A2	5318 A1	9301 A2	

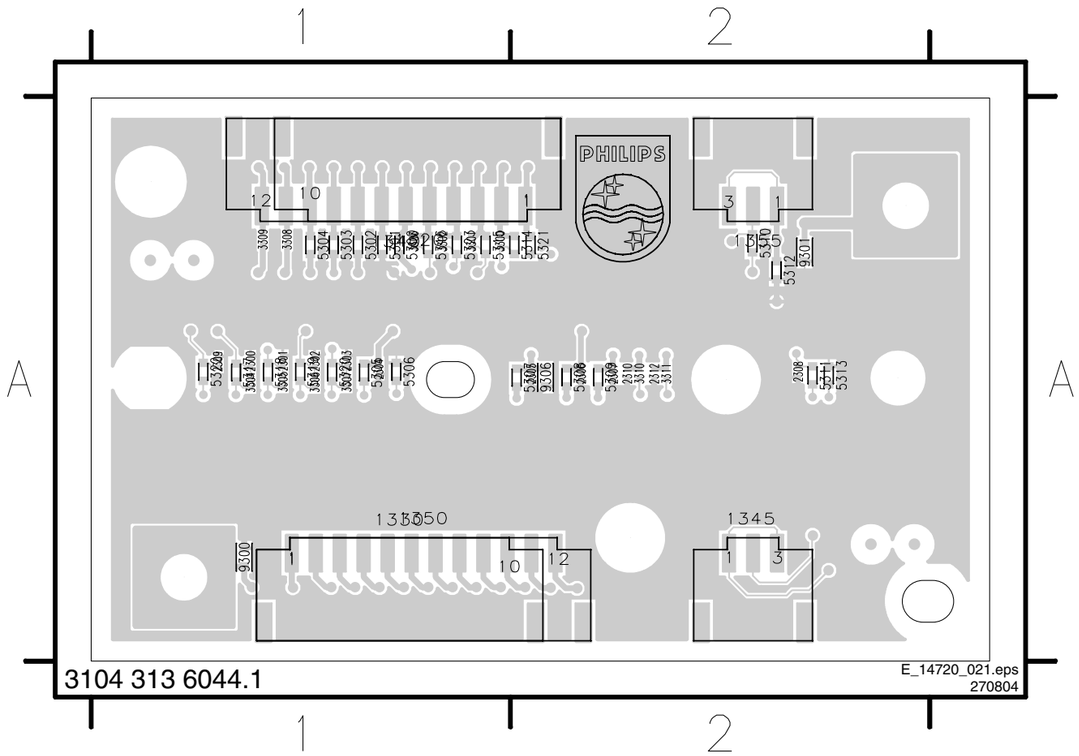

Layout EMC Filter Panel (Bottom Side)

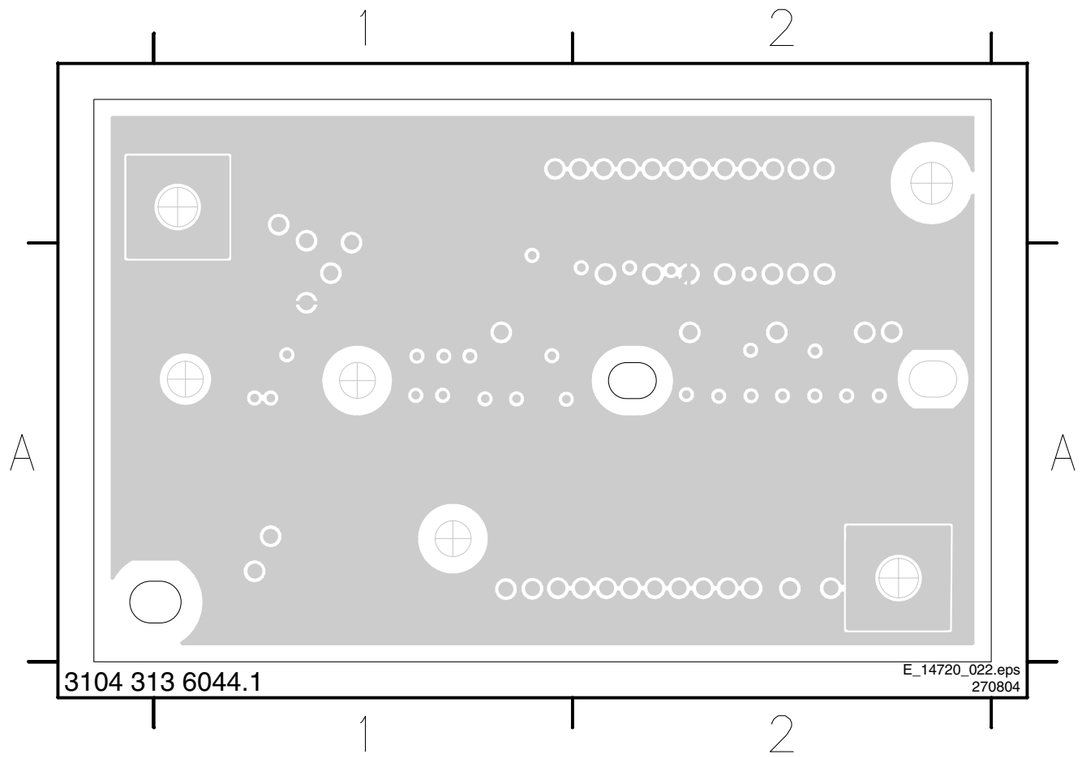

Led and Switch Panel

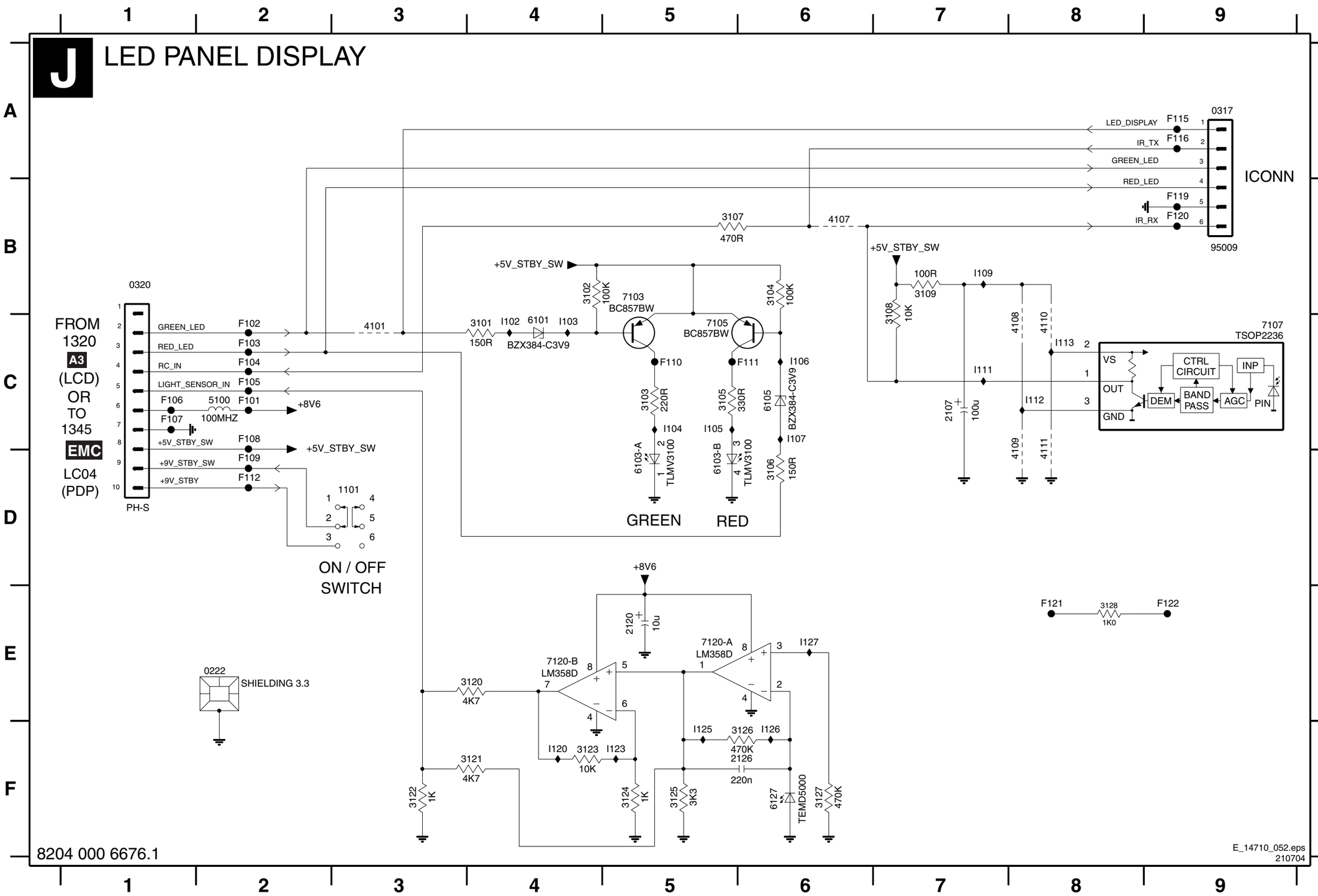

0222 E2
0317 A9
0320 B1
1101 D3
2107 C7
2120 E5
2126 F6
3101 C4
3102 B4
3103 C5
3104 B6
3105 C5
3106 D6
3107 B5
3108 B7
3109 B7
3120 E4
3121 F4
3122 F3
3123 F4
3124 F5
3125 F5
3126 F6
3127 F6
3128 E8
4101 C3
4107 B6
4108 C8
4109 C8
4110 C8
4111 C8
5100 C2
6101 C4
6103-A D5
6103-B D5
6105 C6
6127 F6
7103 B5
7105 C5
7107 C9
7120-A E5
7120-B E4
F101 C2
F102 C2
F103 C2
F104 C2
F105 C2
F106 C1
F107 C1
F108 C2
F109 D2
F110 C5
F111 C6
F112 D2
F115 A9
F116 A9
F119 B9
F120 B9
F121 E8
F122 E9
I102 C4
I103 C4
I104 C5
I105 C5
I106 C6
I107 C6
I109 B7
I111 C7
I112 C8
I113 C8
I120 F4
I123 F5
I125 F5
I126 F6
I127 E6

Layout Led and Switch Panel (Top Side)

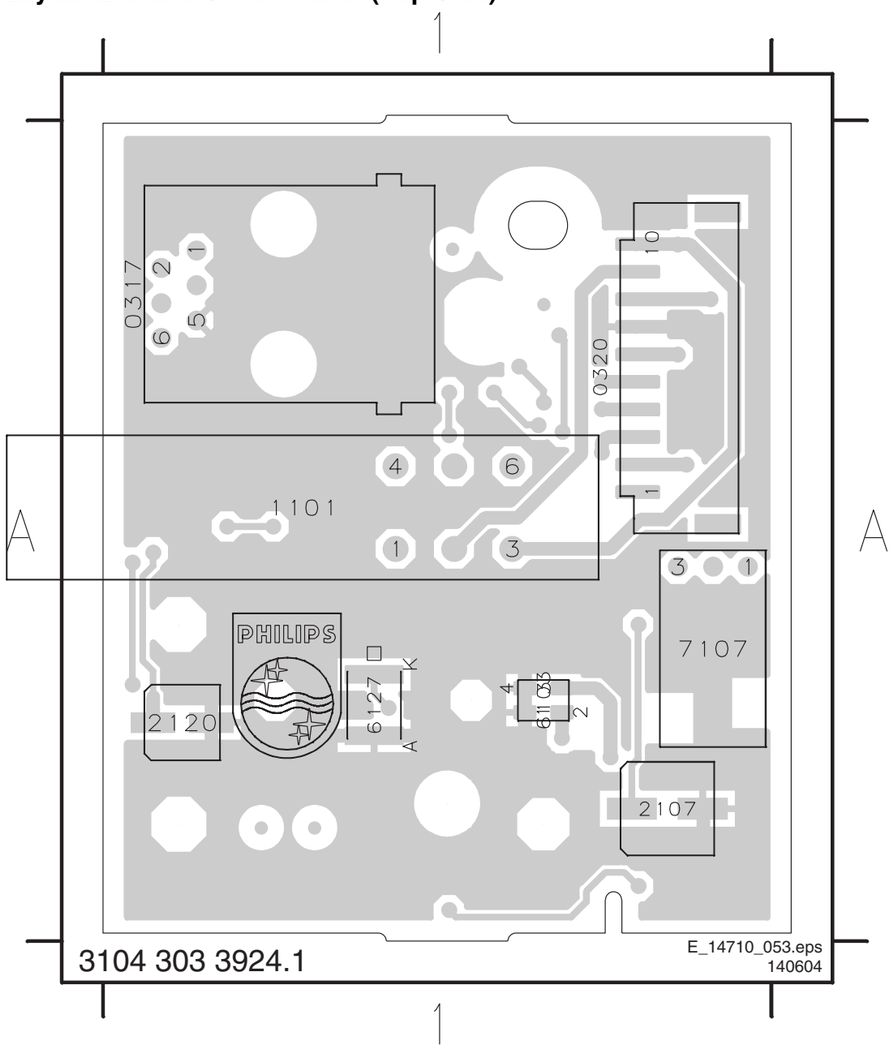

0317	A1
0320	A1
1101	A1
2107	A1
2120	A1
6103	A1
6127	A1
7107	A1

Layout Led and Switch Panel (Bottom Side)

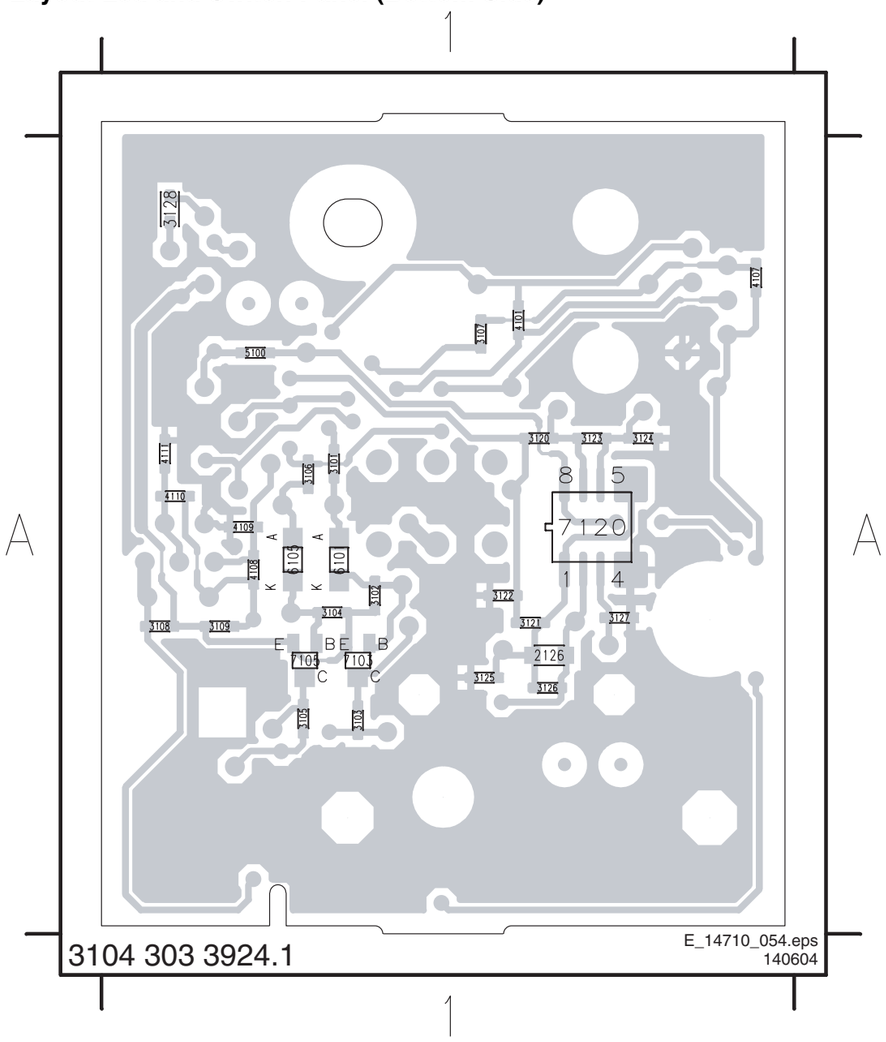

0317	A1
1101	A1
2126	A1
3101	A1
3102	A1
3103	A1
3104	A1
3105	A1
3106	A1
3107	A1
3108	A1
3109	A1
3120	A1
3121	A1
3122	A1
3123	A1
3124	A1
3125	A1
3126	A1
3127	A1
3128	A1
4101	A1
4107	A1
4108	A1
4109	A1
4110	A1
4111	A1
5100	A1
6101	A1
6105	A1
7103	A1
7105	A1
7107	A1
7120	A1

Personal Notes:

8. Alignments

Index of this chapter:
1. General alignment conditions
2. Hardware alignments
3. Software alignments
4. Option settings

Note: The Service Default Mode (SDM) and Service Alignment Mode (SAM) are described in chapter 5. Menu navigation is done with the Cursor Up, Down, Left or Right keys of the remote control transmitter.

8.1 General Alignment Conditions

8.1.1 Start Conditions

Perform all electrical adjustments under the following conditions:
- Power supply voltage (depends on region):
  - EU: 230 V_{AC} / 50 Hz (± 10%).
  - US: 120 V_{AC} / 60 Hz (± 10%).
  - AP: 120 V_{AC} or 230 V_{AC} / 50 Hz (± 10%).
- Connect the set to the mains via an isolation transformer with low internal resistance.
- Allow the set to warm up for approximately 15 minutes.
- Measure voltages and waveforms in relation to chassis ground (with the exception of the voltages on the primary side of the power supply).
  Caution: never use heatsinks as ground.
- Test probe: Ri > 10 Mohm, Ci < 20 pF.
- Use an isolated trimmer/screwdriver to perform alignments.

8.1.2 Initial Settings

Perform all electrical adjustments with the following initial settings:
1. To avoid the working of the lightsensor, set "Active Control" to "Off" (via the "Active Control" button on the RC).
2. Set "Smart Picture" to "Natural" or “Soft” (via the "Smart Picture" button on the RC).

8.1.3 Alignment Sequence

- First, set the correct options:
  - In SAM, select OPTIONS,
  - Fill in the option settings according to the set sticker (see also paragraph "Option Settings"),
  - Store the OPTIONS by switching the set to STAND-BY.
- Warming up (>15 minutes).
- White-D alignment.

8.2 Hardware Alignments

No hardware alignments necessary.

8.3 Software Alignments

With the software alignments of the Service Alignment Mode (SAM), Options can be set and the WHITE TONE, TUNER (IF) and AUDIO settings can be aligned.

To store the data: Use the RC button MENU to switch to the main menu and then switch to STAND-BY mode.

8.3.1 SAM Menu

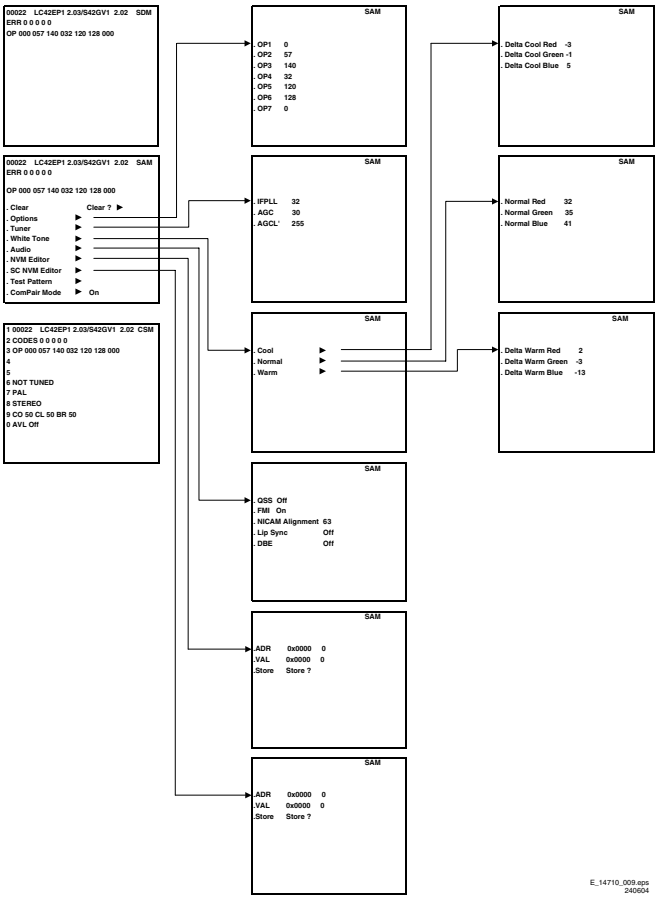

Figure 8-1 Overview SAM menu

8.3.2 White Tone

Method 1 (with color analyser):
Supply a 100% white uniformity test signal to the tuner.
Enter SAM menu. Color features are switched “off” automatically.
Do **NOT** change the SMART PICTURE, ACTIVE CONTROL and CONTRAST+ settings, to prevent activating of Green Enhancement, Blue Stretch, and Black Stretch.
Offset values in NVM are used for HD-, HDMI- and VGA mode only the settings in TV mode need to be set.
Make the following settings in the normal user menu, when television is in TV Mode:

Table 8-1 Picture settings for white tone alignment

	AUO	LPL	PDP
Contrast	99	99	99
Brightness	42	44	44
Color	50	50	50

Set the following settings in SAM:
WHITE TONE - NORMAL RED to: Initial value.
WHITE TONE - NORMAL GREEN to: Initial value.
WHITE TONE - NORMAL BLUE to: Initial value.
Initial value is: 200 for LCD sets (LPL and AUO) and 180 for PDP sets.
Measure the RGB values with a color analyzer.
Leave the value with the lowest output on the initial value.

Align the normal white points, by lowering the other 2 colors, to the right x-y coordinates (see table "White Tone alignment values").
Note: Only lower the colors to prevent clipping!

Table 8-2 White Tone alignment values

Color temp. (K)	Normal All regions (8700)
X	0.289
Y	0.299

Note: Measure with a calibrated (phosphor- independent) color analyser in the centre of the screen. Use a contact less analyser (e.g. Minolta CA-210) to align the LCD TV. The color analyser may not touch the screen surface. Also, the measurement needs to be done in a dark environment.
The color analyser must be calibrated for the LCD or Plasma panel in question. See the manual of the color analyser for the procedure on how to perform this calibration.
Only the values for Normal are aligned with X, Y values. The delta values for COLD and WARM are given below.

Table 8-3 Fixed delta values

Screen Type		RED	GREEN	BLUE
PDP	Delta Cool	-6	-10	+5
	Delta Warm	+4	-5	-19
LCD LPL	Delta Cool	-8	-12	+3
	Delta Warm	+2	-10	-21
LCD AUO	Delta Cool	-3	-12	+10
	Delta Warm	+5	-5	-20

After the alignment is finished, switch the set to STANDBY, in order to store the alignments. When disconnecting the power before doing this, the settings will not be stored.

Method 2 (without color analyser):
If you do not have a color analyser, you can use the default values. These values are based on the average values in production.
- Set the values for the NORMAL color temperature. Given in the table “Average statistical values for “NORMAL” from production.
- Set the delta values for the COOL and WARM mode. See table: “Fixed delta values.”
- After the alignment is finished, switch the set to STANDBY, in order to store the alignments. When disconnecting the power before doing this, the settings will not be stored.

Table 8-4 Average statistical values for “NORMAL” from production.

Screen type		RED	GREEN	BLUE
PDP	Normal	???	???	???
LCD LPL	Normal	???	???	???
LCD AUO	Normal	???	???	???
Values are valid for all regions				
Recently a new and more accurate method to perform this alignment has been introduced. Therefore there are no statistical values available yet. When available they will be published in an update manual.				

8.3.3 Tuner Adjustment

AGC (RF AGC Take Over Point)
Set pattern generator (e.g. PM5580) with colour bar pattern and connect to aerial input with RF signal amplitude - 10mV and set frequency for PAL/SECAM to 475.25 MHz. For France select the L’-signal.
- Activate the SAM-menu. Go to the sub-menu TUNER, select the sub-menu option AFC WINDOW and adjust the value to “100 kHz”.
- Select the AGC sub-menu.
- Connect a DC multi-meter to test point F306 or pin1 of the tuner.
- Adjust the AGC until the voltage at pin 1 of the tuner is 3.3 V +0.5 / -1.0.
- The value can be increased or decreased by pressing the RIGHT/LEFT cursor button on the RC.
- Switch the set to STAND-BY to store the data.

8.3.4 Grey Scale Adjustment

SDTV Grey Scale Adjustment

Equipment and setting
- E.g. Fluke 54200 or Philips PM5580.
- 100% “8-step grey scale” pattern.

Alignment Method
- Switch with the RC to TV mode,
- Press the MUTE button on RC,
- Set SMART PICTURE to SOFT mode,
- Activate the auto colour function by pressing key-sequence:
  "INFO - MUTE - MUTE - MUTE - INFO - MENU - INFO”.

Expected Results
- Visual check if the 8 Grey levels are correct.

Analog PC Grey Scale Adjustment

Equipment and setting
- Quantum Data 802B.
- PC input signal, with 64 levels Grey scale pattern, 1024x768 @ 60Hz (Format= 81:DMT1060, Pattern= 123:Grey 64).
- PC input at D-sub VGA connector.

Alignment Method
- Switch with the RC to PC mode.
- Press the MUTE button on RC.
- Set BRIGHTNESS and CONTRAST to nominal “50”.
- Activate the auto colour function by pressing key-sequence:
  "INFO - MUTE - MUTE - MUTE - INFO - MENU - INFO”.

Expected Results
- Visual check if the 64 Grey levels are correct.

HD Grey Scale Adjustment

Equipment and setting
- Quantum Data 802B.
- HD input signal, Top half 100% colour bar and bottom half Grey scale pattern,1920x1080i@60Hz YPbPr (Format= 1080i30, Pattern= HDBar100).
- HD input at D-sub VGA connector.

Alignment Method
- Switch with the RC to HD mode.
- Press the MUTE button on RC.

- Activate the auto colour function by pressing key-sequence:
  "INFO - MUTE - MUTE - MUTE - INFO - MENU - INFO".

Expected Results
- Visual check if Colour bar tint and Grey scale is correct.

8.3.5 Sound

No adjustments needed for sound.

8.3.6 Options

Options are used to control the presence/absence of certain features and hardware.

How to change an Option Byte
An Option Byte represents a number of different options. Changing these bytes directly makes it possible to set all options very fast. All options are controlled via seven option bytes. Select the option byte (OP1.. OP7) with the cursor UP/DOWN keys, and enter the new value.

Leaving the OPTION sub menu saves the changes in the Option Byte settings. Some changes will only take effect after the set has been switched “off” and “on” with the AC power switch (cold start).

Table 8-5 Option codes (general overview for all regions and displays)

Bit (DEC)	Option	Description	/61 (AP)	/69 (AP)	/93 (AP)	/00 (EU)	/37 (US)	Remarks
7 (128)	OP_PHILIPS_TUNER	Philips Tuner available	1	1	1	1	1	
6 (64)	OP_FM_RADIO	FM Radio available	0	0	0	0	0	
5 (32)	OP_LNA	Low Noise Amplifier available	0	0	0	0	0	
4 (16)	OP_ATS	Auto Tuning System	0	0	0	1	0	
3 (8)	OP_ACI	ACI	0	0	0	1	0	
2 (4)	OP_UK_PNP	After virgin = English + Great Britain	0	0	0	0	0	
1 (2)	OP_VIRGIN_MODE	Activate Plug & Play menu at start-up	0	0	0	0	0	
0 (1)	OP_CHINA	AP-PAL tuning algorithm for China	0	0	1	0	0	
OP1:			**128**	**128**	**129**	**152**	**128**	
7 (128)	OP_SMART_SOUND	Four smart sound settings	1	1	1	1	1	
6 (64)	OP_UI_GREEN	UI for Magnavox sets (NAFTA)	0	0	0	0	0	
5 (32)	OP_CHANNEL_NAMING	Naming of channel feature available	1	1	1	0	1	
4 (16)	OP_LTI	Histogr. algorithm available (TDA9178)	1	1	1	1	1	
3 (8)	OP_TILT	Picture Rotation available	0	0	0	0	0	
2 (4)	OP_FINE_TUNING	Fine Tuning algorithm available	1	1	1	1	1	
1 (2)	OP_PIP_PHILIPS_TUNER	PIP Philips tuner	0	0	0	0	0	
0 (1)	OP_HUE	Tint for NTSC transmission	1	0	0	0	1	
OP2:			**181**	**180**	**180**	**148**	**181**	
7 (128)	OP_EW_FUNCTION	Geometry adj. for Large screen sets	0	0	0	0	0	
6 (64)	OP_2TUNER_PIP	Double Tuner for PIP available	0	0	0	0	0	
5 (32)	OP_PIP_SPLITTER	Not used	0	0	0	0	0	
4 (16)	OP_SPLITTER	Not used	0	0	0	0	0	
3 (8)	OP_VIRTUAL_DOLBY	Virtual Dolby Effect	1	1	1	1	1	
2 (4)	OP_WIDE_SCREEN	16:9 sets	1	1	1	1	1	
1 (2)	OP_WSSB	Wide Screen Signalling Bit detection	0	1	0	1	0	
0 (1)	OP_ECO_SUBWOOFER	Sub woofer available	0	0	0	0	0	
OP3:			**12**	**14**	**12**	**14**	**12**	
7 (128)	OP_LIP_SYNC	Lip Synchronisation Circuit available	0	0	0	0	0	Not for LCD
6 (64)	OP_NOTUSED2	Not used	0	0	0	0	0	
5 (32)	OP_ULTRA_BASS	Ultra Bass Boost available	0	0	0	0	0	
4 (16)	OP_DELTA_VOLUME	Delta Volume feature available	0	0	0	1	0	EU only
3 (8)	OP_NOTUSED3	Not used	0	0	0	0	0	
2 (4)	OP_NOTUSED4	Not used	0	0	0	0	0	
1 (2)	OP_STEREO_DBX	Stereo DBX for NTSC available	0	0	0	0	1	NTSC only
0 (1)	OP_STEREO_NICAM_2CS	Stereo NICAM 2CS available	0	1	0	1	0	
OP4:			**0**	**1**	**0**	**17**	**2**	
7 (128)	OP_AV1	External Source 1 available	1	1	1	1	1	
6 (64)	OP_AV2	External Source 2 available	1	1	1	1	1	
5 (32)	OP_AV3	External Source 3 (Side AV) available	1	1	1	1	1	
4 (16)	OP_CVI	Component Video In available	1	1	1	0	1	Not for EU
3 (8)	OP_SVHS2	Super Video Home System 2 available	0	0	0	0	0	
2 (4)	OP_SVHS3	Super Video Home System 3 available	0	0	0	0	0	
1 (2)	OP_HOTEL_MODE	LATAM specific simplified Hotel Mode	0	0	0	0	0	
0 (1)	OP_NOTUSED	Not used	0	0	0	0	0	
OP5:			**240**	**240**	**240**	**224**	**240**	
7 (128)	OP_PERSONAL_ZAPPING	Zapping of channels feature available	0	0	0	0	0	
6 (64)	OP_SMART_SURF	Surf List available	0	0	0	0	0	
5 (32)	OP_FMTRAP	FM trap available	0	0	0	0	0	
4 (16)	OP_COMBFILTER	comb filter available	1	1	1	1	1	Internal Hercules
3 (8)	OP_ACTIVE_CONTROL	Auto Picture Impr. feature available	1	1	1	1	1	
2 (4)	OP_SMART_LOCK	Toggle Child Lock & Lock Chan. enabled	1	1	1	1	1	
1 (2)	OP_LIGHT_SENSOR	Light Sensor enabled	1	1	1	1	1	
0 (1)	OP_TWIN_TEXT	2 txt pages on screen available	0	1	1	1	0	
OP6:			**30**	**31**	**31**	**31**	**30**	
7 (128)	OP_TIME_WIN1	1= 5 s, 0= 2 s (Europe fixed 1.2 s)	1	0	1	0	1	
4 (16)	OP_3DCOMB	3D comb filter available	1	0	0	0	1	NTSC only
AP-PAL								
3 (8)	OP_COLOR_SYSTEM_AP	1: Auto, PAL 4.43, NTSC 4.43, NTSC 3.58, SECAM 0: OFF- Auto, PAL 4.43, NTSC 4.43, NTSC 3.58	0	1	0	0	0	
2 (4)	OP_SOUND_SYSTEM_AP_1	000: BG 001: BG / DK 010: I / DK 011: BG / I / DK 100: BG / I / DK / M	1	1	1	0	0	
1 (2)	OP_SOUND_SYSTEM_AP_2		0	0	0	0	0	
0 (1)	OP_SOUND_SYSTEM_AP_3		0	0	0	0	0	
EUROPE								
3 (8)	OP_DUMMY6	Not used	0	0	0	0	0	
2 (4)	OP_DUMMY7	Not used	0	0	0	0	0	
1 (2)	OP_WEST_EU	West Europe Set (0 - East Europe Set) by default "on"	0	0	0	1	0	
0 (1)	OP_MULTI_STANDARD_EUR	For Europe multi standard set	0	0	0	1	0	
LATAM								
3 (8)	OP_DUMMY6	Not used	0	0	0	0	0	
2 (4)	OP_DUMMY7		0	0	0	0	0	
1 (2)	OP_SYSTEM_LT_1	00: NTSC-M, 01: NTSC-M, PAL-M, 10: NTSC-M, PAL-M, PAL-N,	0	0	0	0	0	
0 (1)	OP_SYSTEM_LT_2	11: NTSC-M, PAL-M, PAL-N, PAL-BG	0	0	0	0	0	
NAFTA & AP-NTSC								
3 (8)	OP_DUMMY6	Not used	0	0	0	0	0	
2 (4)	OP_DUMMY7	Not used	0	0	0	0	0	
1 (2)	OP_DUMMY8	Not used	0	0	0	0	0	
0 (1)	OP_DUMMY9	Not used	0	0	0	0	0	
OP7:			**148**	**12**	**132**	**3**	**144**	

9. Circuit Descriptions, Abbreviation List, and IC Data Sheets

Index of this chapter

1. Introduction
2. Block Diagram
3. Power Supply
4. Input/Output
5. Tuner and IF
6. Video: TV Part
7. Video: Scaler Part
8. Audio Processing
9. Control
10. Display
11. Abbreviation List
12. IC Data Sheets

Note:

- Only **new** (not recently published) circuits are described here. For the other circuit descriptions, see a.o. the A02, FTL13, and FTL2.1 Service Manuals.
- Figures can deviate slightly from the actual situation, due to different set executions.
- For a good understanding of the following circuit descriptions, please use the wiring, block and circuit diagrams. Where necessary, you will find a separate drawing for clarification.

9.1 Introduction

The LC4.x is a global chassis for the year 2004. Its architecture is based upon the LC03 chassis (LC4.6 is LCD, LC4.7 is PDP). This chassis has the following (new) features:

- **Audio**: The sound processor is part of the UOC processor (called “Hercules”).
- **Video**: Enhanced video features, video drivers, Active Control and multiple PIP.

The functions for video/audio processing, microprocessor (uP), and CC/Teletext (TXT) decoder are all combined in one IC (TDA120xx, item 7011), the so-called third generation Ultimate One Chip (UOC-III) or “Hercules”. This chip has the following features:

- Control, small signal, mono/stereo, and extensive Audio/Video switching in one IC.
- Upgrade with digital sound & video processing.
- Alignment free IF.
- FM sound, no traps/bandpass filters.
- Full multi-standard color decoder.
- One Xtal reference for all functions (microprocessor, RCP, TXT/CC, RDS, color decoder, and stereo sound processor).

9.2 Block Diagram

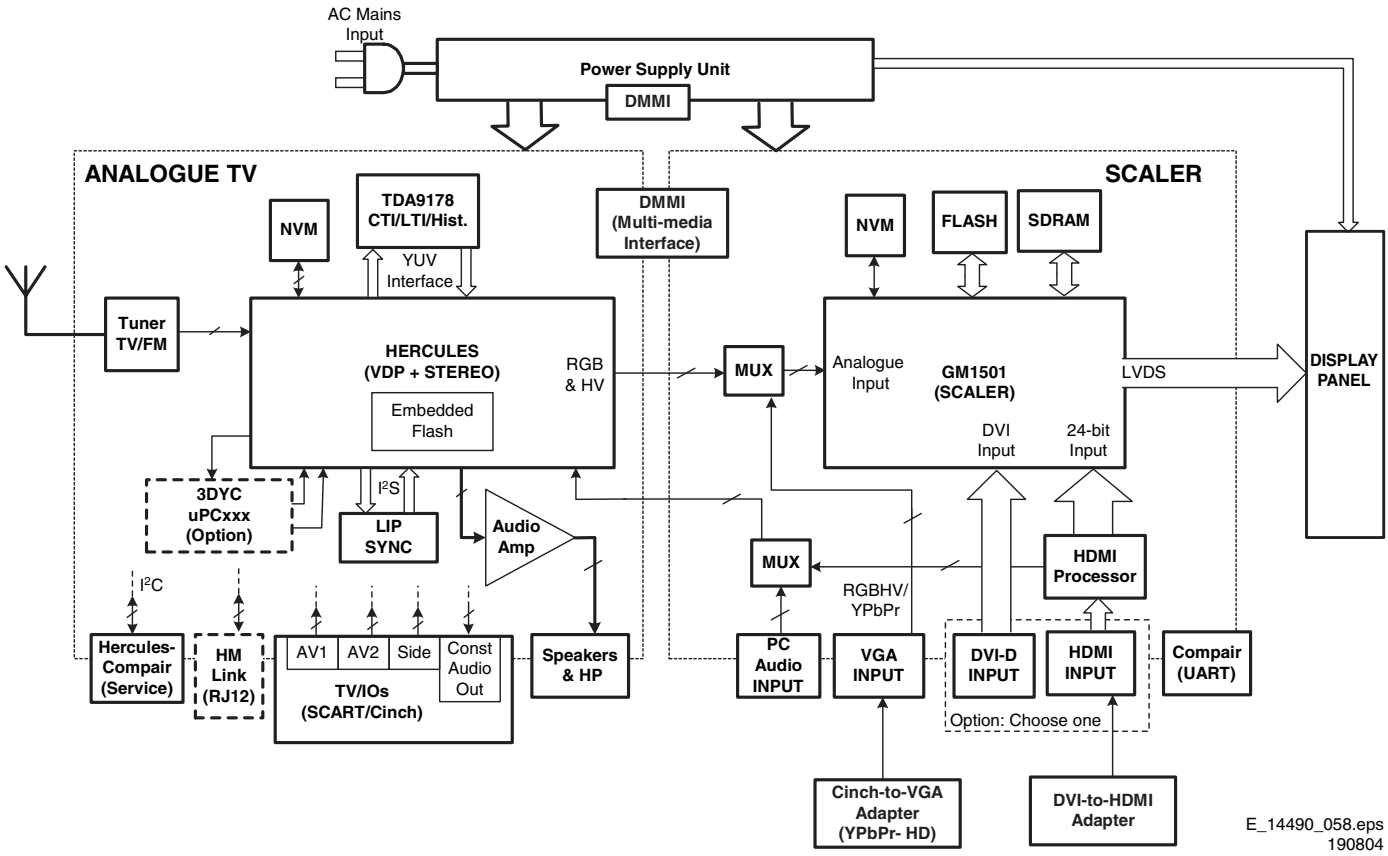

Figure 9-1 Block Diagram

The PLL tuner delivers the IF-signal, via audio & video SAW-filters, to the Video Signal Processor with FLASH embedded TEXT/Control/Graphics m-Controller (TCG m-Controller) and US Closed Caption decoder. TDA120x1 (item 7011, also called Hercules). This IC has the following functions:

- Analogue Video Processing.
- Sound Demodulation.
- Audio Interfaces and switching.
- Volume and tone control for loudspeakers.
- Reflection and delay for loudspeaker channels.
- Micro Controller.
- Data Capture.
- Display.

The Hercules has one input for the internal CVBS signal and a video switch with 3 external CVBS inputs and a CVBS output. All CVBS inputs can be used as Y-input for Y/C signals. However, only 2 Y/C sources can be selected because the circuit has 2 chroma inputs. It is possible to add an additional CVBS(Y)/C input (CVBS/YX and CX) when the YUV interface and the RGB/YPRPB input are not needed. The I/O is divided over two parts: Rear I/O and Side I/O. The rear has two SCART inputs and a PC (VGA) input. The side has a CVBS and Y/C (SVHS) input.
The video part delivers the RGB signals to the Scaler IC.

The Genesis GM1501 Malibu Scaler IC can receive different video input signals: SDTV (from Hercules) or PC (VGA) (from external computer).

After the video processing, the digital data is send via a Low Voltage Differential Signalling bus to the display panel. LVDS is used to improve data speed and to reduce EMI significantly.

There are two I^2C lines and two interrupt and communication lines (TV_IRQ and TV_SC_COM) for the Scaler control. The Scaler communicates with the Hercules as a slave device. To avoid buffer overflow at the Scaler side, the TV_SC_COM line provides the necessary hardware flow control. To allow bi-directional communication, the Scaler can initiate a service interrupt-request to the Hercules via the TV_IRQ line.

The Hercules, and EEPROM are supplied with 3.3 V, which is also present during STANDBY.

The EEPROMs, or NVMs (Non Volatile Memory) are used to store the settings.

The sound part is built up around the Hercules. The Source Selection, Decoding and Processing are all done by the Hercules.

Power supply input are several DC voltages coming from a supply panel.

9.3 Power Supply (SDI plasma panel)

See the FTP1.1 manual for a more detailed description.

9.3.1 Start-up sequence

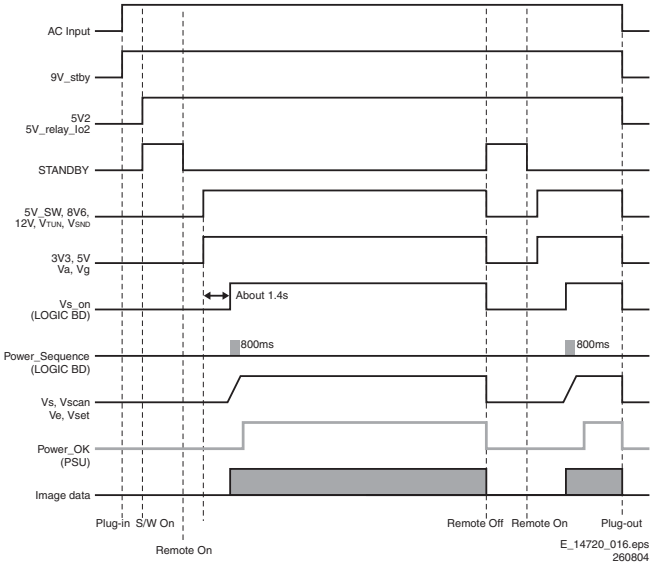

Figure 9-2 Start-up sequence SDI plasma panel

9.4 Input/Output

The I/O is divided over two parts: Rear I/O and Side I/O. The rear has two SCART inputs, a PC (VGA) input, and an Audio input. The side has a CVBS and Y/C (SVHS) input.

EXT1: The input of SCART1 is CVBS + RGB + L/R and the output is the video (+ sound) signal from the tuner (SC1_CVBS_RF_OUT).

EXT2: The input of SCART2 is Y/C + CVBS + L/R. The output signal is CVBS_SC2_MON_OUT (+ sound).
SCART2 is meant for VCR and has therefore some additional signals in relation to EXT1 but no RGB: it has the possibility for Y/C_in: Y_in on pin 20 and Chroma_in on pin 15.
The selection of the external I/O's is controlled by the Hercules.

PC (VGA) in: This input is directly going to the Scaler IC. See paragraph “Video: Scaler Part”.

9.5 Tuner and IF

A Philips UV13xx Tuner is used in the TV board. The SIF signals are decoded by the Hercules. Tuning is done via I^2C.

9.5.1 Video IF amplifier

The IF-filter is integrated in a SAW (Surface Acoustic Wave) filter. One for filtering IF-video (1328) and one for IF-audio (1330). The type of these filters is depending of the standard(s) that has to be received.

The output of the tuner is controlled via an IF-amplifier with AGC-control. This is a voltage feedback from pin 31 of the Hercules to pin 1 of the tuner. The AGC-detector operates on top sync and top white level. AGC take-over point is adjusted via the service alignment mode "Tuner” - “AGC". If there is too much noise in the picture, then it could be that the AGC setting is wrong. The AGC-setting could also be mis-aligned if the picture deforms with perfect signal; the IF-amplifier amplifies too much.

9.6 Video: TV Part (diagrams A1, A2, and A3)

The video processing is completely handled by the Hercules
- IF demodulator.
- Chrominance decoder
- Sync separator.
- Horizontal & vertical drive.
- RGB processing.
- CVBS and SVHS source select.

It has also build in features like:
- CTI.
- Black stretch.
- Blue stretch.
- White stretch.
- Slow start up.
- Dynamic skin tone correction etc.

Further, it also incorporates sound IF traps and filters, and requires only one crystal for all systems.

9.6.1 Histogram (YUV picture improvement) IC

The demodulated video-signal can be checked on pins 74, 75, and 76 of IC7011 and is fed to pins 70, 71, and 72. In this path, the Histogram IC TDA9171 is inserted.
This TDA9178 can control various picture improvements:
- Histogram processing.
- Colour transient improvement.
- Luminance transient improvement.
- Black and white stretch.
- Skin tone correction.
- Green enhancement.
- Blue stretch.
- Smart peaking.
- Video dependent coring.
- Colour dependent stretching.

Since the TDA9171 is connected to the Hercules, picture improvement works only for signals that are routed through the Hercules and not for signals directly connected to the Scaler.

9.7 Video: Scaler Part (diagram A7 and A13)

The Genesis GM1501 Scaler is a dual channel graphics and video processing IC for flat monitors and televisions incorporating Picture in Picture, up to SXGA output resolutions. The Scaler controls the display processing in a FTV, e.g. like the deflection circuit in a CRT-based TV. It controls all the view modes (e.g. like "zooming" and "shifting"). Features like PC (VGA) or HD inputs, are also handled by this part.

9.7.1 Features

The Scaler provides several key IC functions:
- Scaling.
- Auto-configuration/ Auto-Detection.
- Various Input Ports:
  - Analog RGB.
  - Video Graphics.
- Integrated LVDS Transmitter.
- On-chip Micro-controller

9.7.2 Inputs

Analog RGB
The RGB input is fed to pins B2, C2 and D2. This input consists of either the Hercules RGB output or the RGB/YpbPr input of the VGA connector. The Scaler can switch between the two signals via the PC_HD_SEL signal and selection IC SM5301.

PC (VGA) input
The VGA input is processed by the VGA block of the Scaler. The Scaler supports pixel frequencies up to 165MHz. YpbPr format is also supported via the VGA interface and covers resolutions of 480p/560p/720p/1080i.

9.7.3 Output

The Display Output Port provides data and control signals that permit the Scaler to connect to a variety of display devices using a TTL or LVDS interface. The output interface is configurable for single or dual wide TTL/LVDS in 18, 24 or 30-bit RGB pixels format. All display data and timing signals are synchronous with the DCLK output clock. The integrated LVDS transmitter is programmable to allow the data and control signals to be mapped into any sequence depending on the specified receiver format.

9.8 Audio Processing

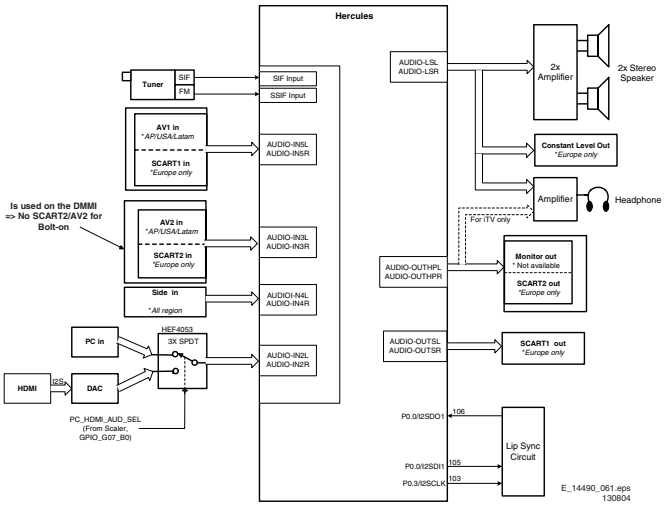

Figure 9-3 Block diagram audio processing

The audio decoding is done entirely via the Hercules. The IF output from the Tuner is fed directly to either the Video-IF or the Sound-IF input depending on the type of concept chosen. There are mainly two types of decoder in the Hercules, an analogue decoder that decodes only Mono, regardless of any standards, and a digital decoder (or DEMDEC) that can decode both Mono and Stereo, again regardless of any standards.

In this chassis, the analogue decoder is used in two cases:
- It is used for AM Sound demodulation in the Europe SECAM LL' transmission.
- It is used for all FM demodulation in AV-Stereo sets.

9.8.1 Diversity

The diversity for the Audio decoding can be broken up into two main concepts:
- The Quasi Split Sound concept used in Europe and some AP sets.
- The Inter Carrier concept, used in NAFTA and LATAM.

The UOC-III family makes no difference anymore between QSS- and Intercarrier IF, nearly all types are software-switchable between the two SAW-filter constructions.

Simple data settings are required for the set to determine whether it is using the Inter Carrier or the QSS concept. These settings are done via the “QSS” and “FMI” bit found in SAM mode. Due to the diversity involved, the data for the 2 bits are being placed in the NVM location and it is required to write once during startup.

On top of that, it can be further broken down into various systems depending on the region. The systems or region chosen, will in turn affect the type of sound standard that is/are allowed to be decoded.

- For Europe, the standard consists of BG/DK/I/LL' for a Multi-System set. There are also versions for Eastern Europe and Western Europe and the standard for decoding will be BG/DK and I/DK respectively.
- For NAFTA and LATAM, there is only one transmission standard, which is the M standard. The diversity then will be based on whether it has a dBx noise reduction or a Non-dBx (no dBx noise reduction).
- For AP, the standard consists of BG/DK/I/M for a Multi-System set. The diversity here will depend on the region. AP China can have a Multi-System and I/DK version. For India, it might only be BG standard.

9.8.2 Functionality

The features available in the Hercules are as follows:

- Treble and Bass Control.
- Surround Sound Effect that includes:
  - Incredible Stereo.
  - Incredible Mono.
  - 3D Sound (not for AV Stereo).
  - TruSurround (not for AV Stereo).
  - Virtual Dolby Surround, VDS422 (not for AV Stereo).
  - Virtual Dolby Surround, VDS423 (not for AV Stereo).
  - Dolby Pro-Logic (not for AV Stereo).
- Bass Feature that includes:
  - Dynamic Ultra-Bass.
  - Dynamic Bass Enhancement.
  - BBE (not for AV Stereo).
- Auto-Volume Leveler.
- 5 Band Equalizer.
- Loudness Control.

All the features stated are available for the Full Stereo versions and limited features for the AV Stereo

9.8.3 Audio Amplifier Panel (diagram SA3)

Introduction

This panel contains the audio filters and amplifiers necessary for driving the speakers.
The audio inputs come from the SSB (via connector 1739).
The PSU delivers the positive and negative supply voltage of 16 VDC.
After being filtered and amplified, the signals go to the speaker section, where the full range speakers are driven (load impedance is 8 ohm).

Amplifier

The amplifier is an integrated class-D amplifier (TDA7490). It combines a good performance with a high efficiency, resulting in a big reduction in heat generation.

Principle

Audio-power-amplifier systems have traditionally used linear amplifiers, which are well known for being inefficient. In fact, a linear Class AB amplifier is designed to act as a variable resistor network between the power supply and the load. The transistors operate in their linear region, and the voltage that is dropped across the transistors (in their role as variable resistors) is lost as heat, particularly in the output transistors. Class D amplifiers were developed as a way to increase the efficiency of audio-power-amplifier systems.

The Class D amplifier works by varying the duty cycle of a Pulse Width Modulated (PWM) signal.
By comparing the input voltage to a triangle wave, the amplifier increases duty cycle to increase output voltage, and decreases duty cycle to decrease output voltage.
The output transistors of a Class D amplifier switch from 'full off' to 'full on' (saturated) and then back again, spending very little time in the linear region in between. Therefore, very little power is lost to heat. If the transistors have a low 'on' resistance (RDS(ON)), little voltage is dropped across them, further reducing losses.
A Low Pass Filter at the output passes only the average of the output wave, which is an amplified version of the input signal. In order to keep the distortion low, negative feedback is applied (via R3723/3708).

The advantage of Class D is increased efficiency (= less heat dissipation). Class D amplifiers can drive the same output power as a Class AB amplifier using less supply current.
The disadvantage is the large output filter that drives up cost and size. The main reason for this filter is that the switching waveform results in maximum current flow. This causes more loss in the load, which causes lower efficiency. An LC filter with a cut-off frequency less than the Class D switching frequency, allows the switching current to flow through the filter instead of the load. The filter is less lossy than the speaker, which causes less power dissipated at high output power and increases efficiency in most cases.

Mute

A mute switch (item 7701) is provided at pin 6. This switch is controlled by the SOUND_ENABLE line from the Hercules (mute during operation).

Protections

Because of the symmetrical supply, a DC-blocking capacitor, between the amplifier and the speaker, is not necessary. However, it is still necessary to protect the speaker for DC voltages. Therefore, the following protections are therefore implemented:

- Via R3765 and R3767, each stabilised supply voltage line is checked on deviations.
- Via R3718 and 3717, each amplifier output is checked for DC-voltage.

9.9 Control

9.9.1 Hercules

The System Board has two main micro-controllers on board. These are:

- On-chip x86 micro-controller (OCM) from Genesis LCD TV/ Monitor Controller.
- On-chip 80C51 micro-controller from Philips Semiconductors UOCIII (Hercules) series.

Each micro-controller has it own I2C bus which host its own internal devices.
The Hercules is integrated with the Video and Audio Processor.
For dynamic data storage, such as SMART PICTURE and SMART SOUND settings, an external NVM IC is being used.
Another feature includes an optional Teletext/Closed Caption decoder with the possibility of different page storage depending on the Hercules type number.

The Micro Controller ranges in ROM from 128 kB with no TXT-decoder to 128 kB with a 10 page Teletext or with Closed Caption.

9.9.2 Block Diagram

The block diagram of the Micro Controller application is shown below.

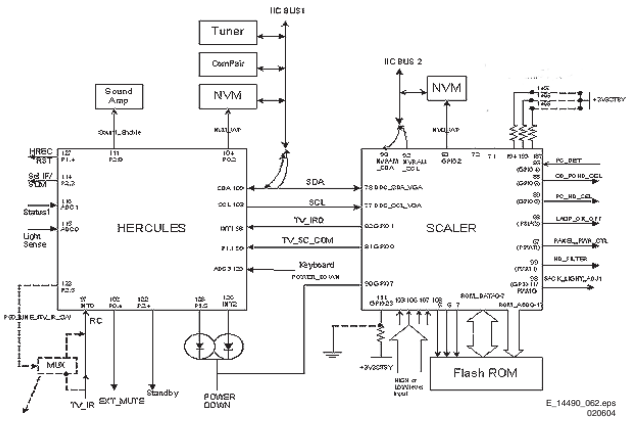

Figure 9-4 Micro Controller block diagram

9.9.3 Basic Specification

The Micro Controller operates at the following supply voltages:
- +3.3 V_{DC} at pins 4, 88, 94, and 109.
- +1.8 V_{DC} at pins 93, 96, and 117.
- I^2C pull up supply: +3.3 V_{DC}.

9.9.4 Pin Configuration and Functionality

The ports of the Micro Controller can be configured as follows:
- A normal input port.
- An input ADC port.
- An output Open Drain port.
- An output Push-Pull port.
- An output PWM port.
- Input/Output Port

The following table shows the ports used for the L04 control:

Table 9-1 Micro Controller ports overview

Pin	Name	Description	Configuration
97	INT0/ P0.5	IR	INT0
98	P1.0/ INT1	TV_IRQ	INT2
99	P1.1/ T0	TV_SC_COM	P1.1
102	P0.4/ I2SWS	EXT_MUTE	P0.4
103	P0.3/ I2SCLK	Lip Sync	I2SCLK
104	P0.2/ I2SDO2	NVM_WP	P0.2
105	P0.1/ I2SDO1	Lip Sync	I2SDO1
106	P0.0/ I2SDI/O	Lip Sync	I2SDI/O
107	P1.3/ T1	PC-TV_LED	P1.3
108	P1.6/ SCL	SCL	SCL
109	P1.7/ SDA	SDA	SDA
111	P2.0/ TPWM	SOUND_ENABLE	P2.0
112	P2.1/ PWM0	(for future use)	-
113	P2.2/ PWM1	(for future use)	-
114	P2.3/ PWM2	SEL_IF	P2.3
115	P3.0/ ADC0	Light Sensor - SDM	ADC0
116	P3.1/ ADC1	STATUS_1	ADC1
119	P3.2/ ADC2	STATUS_2	ADC2
120	P3.3/ ADC3	KEYBOARD	ADC3
122	P2.4/ PWM3	STANDBY	P2.4
123	P2.5/ PWM4	(for future use)	-
126	P1.2/ INT2	(for future use)	-
127	P1.4/ RX	HERC_RESET	-
128	P1.5/ TX	POWER_DOWN	P1.5

The description of each functional pin is explained below:

- **LED.** This signal is used to drive the LED for Stand-by, Remote, and Error Indicaton:
  - During protection mode, the LED blinks and the set is in Stand-by mode.
  - During error conditions it blinks at a predefined rate.
  - After receiving a valid RC or local keyboard command it flashes once.
  - For sets with error message indication, the LED blinks when message is active and the set is in Stand-by mode.
- **SCL.** This is the clock wire of the two-wire single master bi-directional I^2C bus.
- **SDA.** This is the data wire of the two-wire single master bi-directional I^2C bus.
- **STANDBY.** The Hercules generates this signal. This can enable the power supply in normal operation and disable it during Stand-by. It is of logic “high” (3.3 V) under normal operation and “low” (0 V) during Stand-by.
- **IR.** This input pin is connected to an RC5 remote control receiver.
- **SEL-IF.** This is an output pin to switch the Video SAW filter between M system and other systems.
  - 0: NTSC M (default).
  - 1: PAL B/G, DK, I, L.
- **NVM_WP.** The global protection line is used to enable and disable write protection to the NVM. When write to the NVM is required, pin 7 of the NVM must be pulled to logic “0" first (via Write_Protect of the micro-controller pin) before a write is performed. Otherwise pin 7 of NVM must always be at logic “1”
  - 0: Disabled.
  - 1: Enabled (default).
- **SOUND_ENABLE.** This pin is use to MUTE the audio amplifier. It is configured as push pull.
- **STATUS_1.** This signal is used to read the status of the SCART 1 input (EU only).
- **STATUS_2.** This signal is used to read the status of the SCART 2 input (EU only).
- **HERC_RESET.** This pin is use to switch the +1.8 V supply.
- **POWER_DOWN.** The power supply generates this signal. Logic “high” (3.3 V) under normal operation of the TV and goes “low” (0 V) when the Mains input voltage supply goes below 70 V_{AC}.
- **KEYBOARD.** Following are the Keyboard functions and the step values (8 bit) for it.

Table 9-2 Local keyboard values

Function	Voltage (V_{DC})	Step values (8 bit)
P+ / Ch+	0.43	7 - 33
P- / Ch-	0.93	54 - 73
Menu (Vol - and Vol +)	1.19	74 - 96
Vol -	1.49	97 - 121
Vol +	2.12	148 - 169

- **TV_IRQ.** This signal is the interrupt from the Scaler IC.
- **TV_SC_COM.** This signal is used for the communication with the Scaler IC.
- **EXT_MUTE.** This signal is used to reduce the switch “off” plop.

9.10 Abbreviation List

1080i	1080 visible lines, interlaced
1080p	1080 visible lines, progressive scan
2CS	2 Carrier Sound
2DNR	Spatial (2D) Noise Reduction
3DNR	Temporal (3D) Noise Reduction
480i	480 visible lines, interlaced
480p	480 visible lines, progressive scan
AARA	Automatic Aspect Ratio Adaptation: algorithm that adapts aspect ratio to remove horizontal black bars; keeping up the original aspect ratio
ACI	Automatic Channel Installation: algorithm that installs TV channels directly from a cable network by means of a predefined TXT page
ADC	Analogue to Digital Converter
AFC	Automatic Frequency Control: control signal used to tune to the correct frequency
AGC	Automatic Gain Control: algorithm that controls the video input of the feature box
AM	Amplitude Modulation
AP	Asia Pacific
AR	Aspect Ratio: 4 by 3 or 16 by 9
ASD	Automatic Standard Detection
AV	Audio Video
B-SC1-IN	Blue SCART1 in
B-SC2-IN	Blue SCART2 in
B-TXT	Blue teletext
B/G	Monochrome TV system. Sound carrier distance is 5.5 MHz
BTSC	Broadcast Television System Committee
C-FRONT	Chrominance front input
CBA	Circuit Board Assembly (or PWB)
CL	Constant Level: audio output to connect with an external amplifier
CLUT	Color Look Up Table
ComPair	Computer aided rePair
CSM	Customer Service Mode
CVBS	Composite Video Blanking and Synchronisation
CVBS-EXT	CVBS signal from external source (VCR, VCD, etc.)
CVBS-INT	CVBS signal from Tuner
CVBS-MON	CVBS monitor signal
CVBS-TER-OUT	CVBS terrestrial out
DAC	Digital to Analogue Converter
DBE	Dynamic Bass Enhancement: extra low frequency amplification
DFU	Directions For Use: owner's manual
DNR	Dynamic Noise Reduction
DRAM	Dynamic RAM
DSP	Digital Signal Processing
DST	Dealer Service Tool: special (European) remote control designed for service technicians
DTS	Digital Theatre Sound
DVD	Digital Versatile Disc
DVI	Digital Visual Interface
DW	Double Window
EEPROM	Electrically Erasable and Programmable Read Only Memory
EU	EUrope
EXT	EXTernal (source), entering the set by SCART or by cinches (jacks)
FBL	Fast Blanking: DC signal accompanying RGB signals
FBL-SC1-IN	Fast blanking signal for SCART1 in
FBL-SC2-IN	Fast blanking signal for SCART2 in
FBL-TXT	Fast Blanking Teletext
FLASH	FLASH memory
FM	Field Memory / Frequency Modulation
FMR	FM Radio
FRC	Frame Rate Converter
FRONT-C	Front input chrominance (SVHS)
FRONT-DETECT	Front input detection
FRONT-Y_CVBS	Front input luminance or CVBS (SVHS)
FTV	Flat TeleVison
G-SC1-IN	Green SCART1 in
G-SC2-IN	Green SCART2 in
G-TXT	Green teletext
H	H_sync to the module
HD	High Definition
HDMI	High Definition Multimedia Interface, digital audio and video interface
HP	HeadPhone
I	Monochrome TV system. Sound carrier distance is 6.0 MHz
I^2C	Integrated IC bus
I^2S	Integrated IC Sound bus
IC	Integrated Circuit
IF	Intermediate Frequency
Interlaced	Scan mode where two fields are used to form one frame. Each field contains half the number of the total amount of lines. The fields are written in "pairs", causing line flicker.
IR	Infra Red
IRQ	Interrupt ReQuest
Last Status	The settings last chosen by the customer and read and stored in RAM or in the NVM. They are called at start-up of the set to configure it according the customers wishes
LATAM	LATin AMerica
LC04	Philips chassis name for LCD TV 2004 project
LCD	Liquid Crystal Display
LED	Light Emitting Diode
L/L'	Monochrome TV system. Sound carrier distance is 6.5 MHz. L' is Band I, L is all bands except for Band I
LS	LoudSpeaker
LVDS	Low Voltage Differential Signalling, data transmission system for high speed and low EMI communication.
M/N	Monochrome TV system. Sound carrier distance is 4.5 MHz
MOSFET	Metal Oxide Semiconductor Field Effect Transistor
MPEG	Motion Pictures Experts Group
MSP	Multi-standard Sound Processor: ITT sound decoder
MUTE	MUTE Line
NAFTA	North American Free Trade Association: Trade agreement between Canada, USA and Mexico
NC	Not Connected
NICAM	Near Instantaneous Compounded Audio Multiplexing. This is a digital sound system, used mainly in Europe.
NTSC	National Television Standard Committee. Color system used mainly in North America and Japan. Color carrier NTSC M/N = 3.579545 MHz, NTSC 4.43 = 4.433619 MHz (this is a VCR norm, it is not transmitted off-air)
NVM	Non Volatile Memory: IC containing TV related data (for example, options)
O/C	Open Circuit
ON/OFF LED	On/Off control signal for the LED
OSD	On Screen Display
PAL	Phase Alternating Line. Color system used mainly in Western Europe (color

	carrier = 4.433619 MHz) and South America (color carrier PAL M = 3.575612 MHz and PAL N = 3.582056 MHz)
PC	Personal Computer
PCB	Printed Circuit Board (or PWB)
PDP	Plasma Display Panel
PIG	Picture In Graphic
PIP	Picture In Picture
PLL	Phase Locked Loop. Used, for example, in FST tuning systems. The customer can directly provide the desired frequency
Progressive Scan	Scan mode where all scan lines are displayed in one frame at the same time, creating a double vertical resolution.
PWB	Printed Wiring Board (or PCB)
RAM	Random Access Memory
RC	Remote Control transmitter
RC5 (6)	Remote Control system 5 (6), the signal from the remote control receiver
RGB	Red, Green, and Blue. The primary color signals for TV. By mixing levels of R, G, and B, all colors (Y/C) are reproduced.
RGBHV	Red, Green, Blue, Horizontal sync, and Vertical sync
ROM	Read Only Memory
SAM	Service Alignment Mode
SIF	Sound Intermediate Frequency
SC	SandCastle: two-level pulse derived from sync signals
SC1-OUT	SCART output of the MSP audio IC
SC2-B-IN	SCART2 Blue in
SC2-C-IN	SCART2 chrominance in
SC2-OUT	SCART output of the MSP audio IC
S/C	Short Circuit
SCL	Clock signal on I^2C bus
SD	Standard Definition
SDA	Data signal on I^2C bus
SDM	Service Default Mode
SDRAM	Synchronous DRAM
SECAM	SEequence Couleur Avec Memoire. Color system used mainly in France and Eastern Europe. Color carriers = 4.406250 MHz and 4.250000 MHz
SIF	Sound Intermediate Frequency
SMPS	Switch Mode Power Supply
SND	SouND
SNDL-SC1-IN	Sound left SCART1 in
SNDL-SC1-OUT	Sound left SCART1 out
SNDL-SC2-IN	Sound left SCART2 in
SNDL-SC2-OUT	Sound left SCART2 out
SNDR-SC1-IN	Sound right SCART1 in
SNDR-SC1-OUT	Sound right SCART1 out
SNDR-SC2-IN	Sound right SCART2 out
SNDR-SC2-OUT	Sound right SCART2 out
SNDS-VL-OUT	Surround sound left variable level out
SNDS-VR-OUT	Surround sound right variable level out
SOPS	Self Oscillating Power Supply
S/PDIF	Sony Philips Digital InterFace
SRAM	Static RAM
STBY	Stand-by
SVHS	Super Video Home System
SW	SubWoofer / SoftWare
THD	Total Harmonic Distortion
TXT	TeleteXT
uP	Microprocessor
VL	Variable Level out: processed audio output toward external amplifier
VCR	Video Cassette Recorder
VGA	Video Graphics Array
WD	Watch Dog
WYSIWYR	What You See Is What You Record: record selection that follows main picture and sound
XTAL	Quartz crystal
YPbPr	Component video (Y= Luminance, Pb/Pr= Colour difference signals B-Y and R-Y, other amplitudes w.r.t. to YUV)
Y/C	Video related signals: Y consists of luminance signal, blanking level and sync; C consists of colour signal.
Y-OUT	Luminance-signal
YUV	Baseband component video (Y= Luminance, U/V= Color difference signals)

9.11 IC Data Sheets

This section shows the internal block diagrams and pin layouts of ICs that are drawn as "black boxes" in the electrical diagrams (with the exception of "memory" and "logic" ICs).

9.11.1 Diagram A2, Type TDA12029H (IC7011)

Block diagram of the “AV-stereo” TV processor with audio DSP

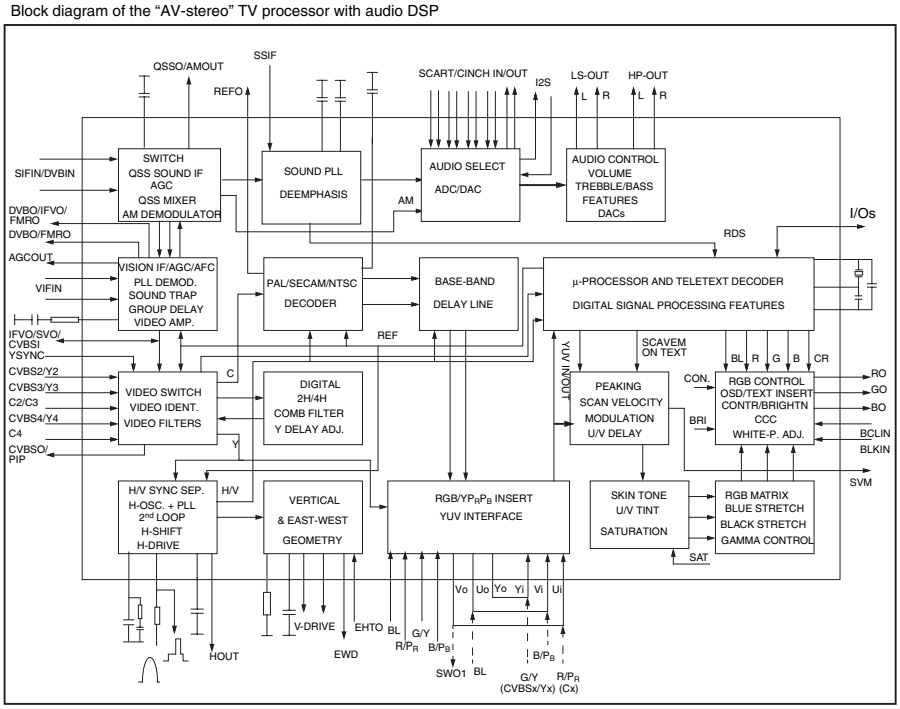

Pin configuration “stereo” and “AV-stereo” versions with Audio DSP

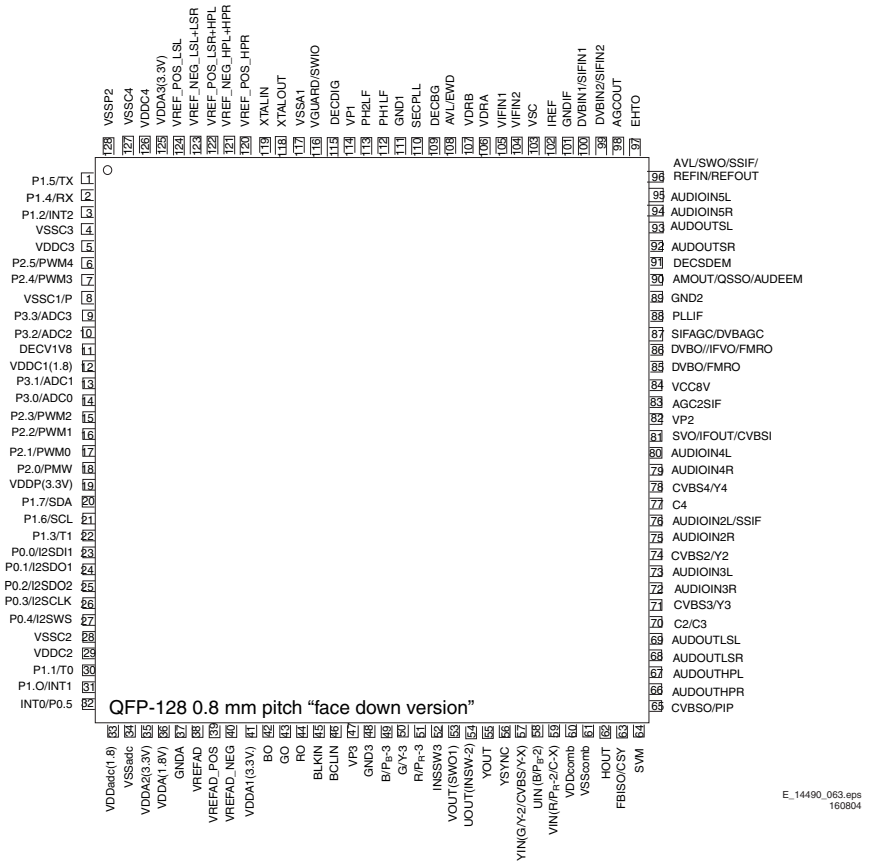

Figure 9-5 Internal Block Diagram and Pin Configuration

9.11.2 Diagram A7, Type GM1501 (IC7401)

Block Diagram

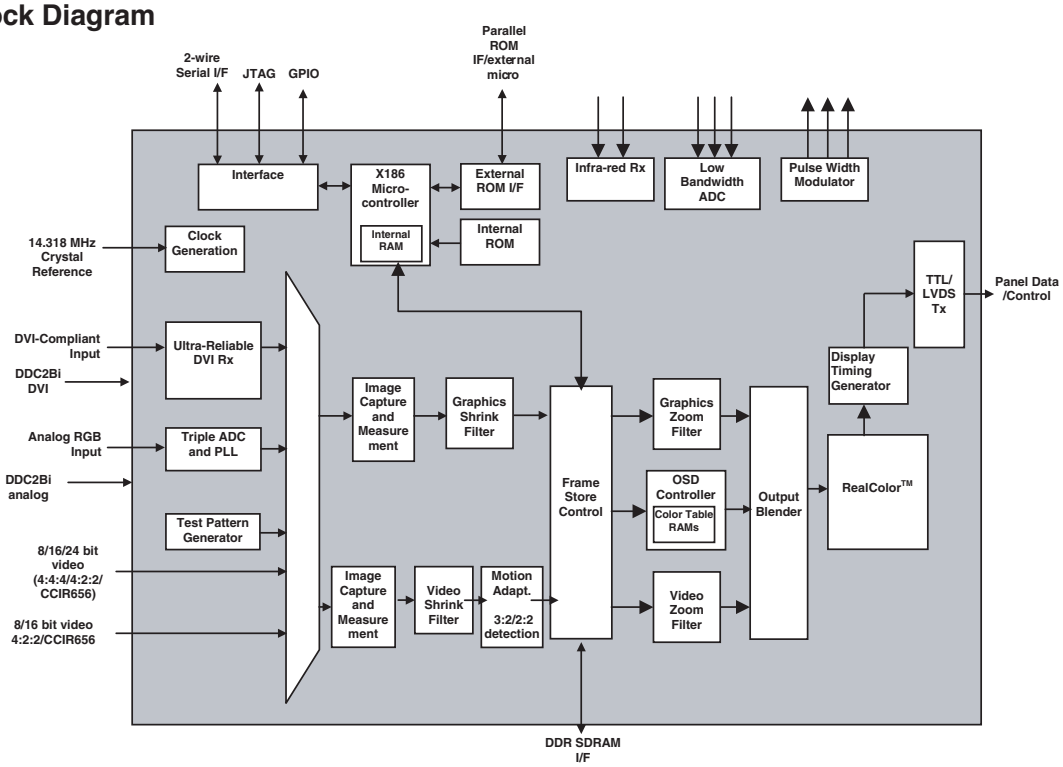

Pin Configuration

	1	2	3	4	5	6	7	8	9	10	11	12	13
A	NC	ADC_3.3	ADC_1.8	ADC_1.8	ADC_DGND	RXC+	DVI_GND	RX0+	RX1+	RX2+	DVI_GND	LBADC_IN3	D_GND
B	BLUE-	BLUE+	ADC_3.3	ADC_DGND	DVI_GND	RXC-	DVI_GND	RX0-	RX1-	RX2-	REXT	LBADC_IN2	D_GND
C	GREEN-	GREEN+	SOG	ADC_AGND	NC	DVI_3.3	DVI_GND	DVI_3.3	DVI_3.3	DVI_3.3	DVI_3.3	LBADC_IN1	LBADC_33
D	RED-	RED+	ADC_3.3	ADC_AGND	NC	DVI_1.8	DVI_GND	DVI_1.8	DVI_1.8	DVI_1.8	DVI_GND	LBADC_ RETURN	LBADC_GND
E	ADC_AGND	ADC_AGND	ADC_3.3	ADC_AGND									
F	NC	VDDD33_ PLL	VSSA33_ RPLL	VDDA33_ RPLL									
G	VDDA33_ FPLL	VSSD33_ PLL	TCLK	XTAL									
H	VDDD33_ SDDS	VSSA33_ SDDS	VDDA33_ SDDS	VSSA33_ FPLL									
J	VDDD33_ DDDS	VSSA33_ DDDS	VDDA33_ DDDS	VSSD33_ SDDS									
K	RESETn	ACS_ RSET_HD	NC	VSSD33_ DDDS						CORE_1.8	CORE_1.8	D_GND	D_GND
L	OCM_INT2	OCM_INT1	AVSYNC	AHSYNC						D_GND	CORE_1.8	D_GND	D_GND
M	OCM_UDO	OCM_UDI	IR0	IR1						D_GND	D_GND	D_GND	D_GND
N	VGA_SDA	VGA_SCL	DVI_SDA	DVI_SCL						D_GND	D_GND	D_GND	D_GND
P	OCM_CS1n	OCM_CS2n	MSTR_SDA	MSTR_SCL						D_GND	D_GND	D_GND	D_GND
R	ROM_CSn	OCM_REn	OCM_WEn	EXTCLK						D_GND	D_GND	D_GND	D_GND
T	OCMADDR 17	OCMADDR 18	OCMADDR 19	OCM_CS0n						D_GND	CORE_1.8	D_GND	D_GND
U	OCMADDR 13	OCMADDR 14	OCMADDR 15	OCMADDR 16						CORE_1.8	CORE_1.8	D_GND	D_GND
V	OCMADDR 9	OCMADDR 10	OCMADDR 11	OCMADDR 12									
W	OCMADDR 6	OCMADDR 7	OCMADDR 8	IO_3.3									
Y	OCMADDR 3	OCMADDR 4	OCMADDR 5	IO_3.3									
AA	OCMADDR 0	OCMADDR 1	OCMADDR 2	IO_3.3									
AB	OCMDATA13	OCMDATA14	OCMDATA15	IO_3.3									
AC	OCMDATA10	OCMDATA11	OCMDATA12	IO_3.3	GPIO_G09_ B2 (DEGRN0)	IO_3.3	DCLK	IO_3.3	GPIO_G07_ B2 (DERED4)	IO_3.3	SHIELD[1] (DEGRN3)	LVDSB_3.3	LVDSB_GND
AD	OCMDATA9	OCMDATA6	OCMDATA3	OCMDATA0	GPIO_G09_ B3 (DEGRN1)	GPIO_G08_ B0 (DORED0)	DEN	GPIO_G08_ B5 (DOBLU1)	GPIO_G07_ B3 (DERED5)	GPIO_G07_ B6 (DERED8)	SHIELD[2] (DEGRN4)	LVDSB_3.3	LVDSB_3.3
AE	OCMDATA8	OCMDATA5	OCMDATA2	GPIO_G09_ B0 (DERED0)	GPIO_G09_ B4 (DEBLU0)	GPIO_G08_ B1 (DORED1)	GPIO_G08_ B3 (DOGRN1)	GPIO_G07_ B0 (DERED2)	GPIO_G07_ B4 (DERED6)	GPIO_G07_ B7 (DERED9)	SHIELD[3] (DEGRN5)	BC+ (DEGRN8)	SHIELD[4] (DEBLU2)
AF	OCMDATA7	OCMDATA4	OCMDATA1	GPIO_G09_ B1 (DERED1)	GPIO_G09_ B5 (DEBLU1)	GPIO_G08_ B2 (DOGRN0)	GPIO_G08_ B4 (DOBLU0)	GPIO_G07_ B1 (DERED3)	GPIO_G07_ B5 (DERED7)	SHIELD[0] (DEGRN2)	B3+ (DEGRN6)	B3- (DEGRN7)	BC- (DEGRN9)

E_14490_099.eps
060804

Figure 9-6 Internal Block Diagram and Pin Configuration

9.11.3 Diagram A12, Type SiI9993CT (IC7808)

BLOCK DIAGRAM

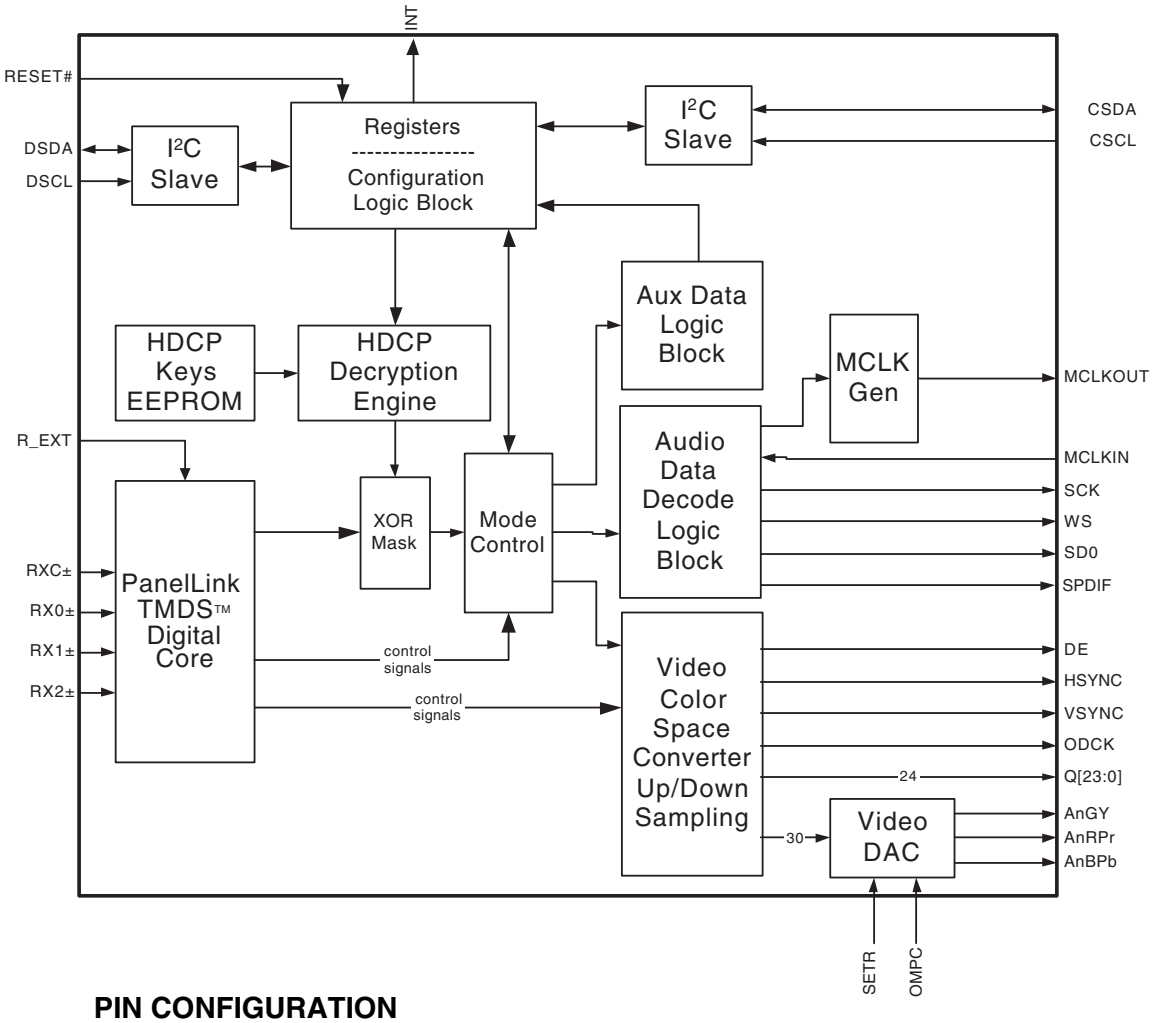

PIN CONFIGURATION

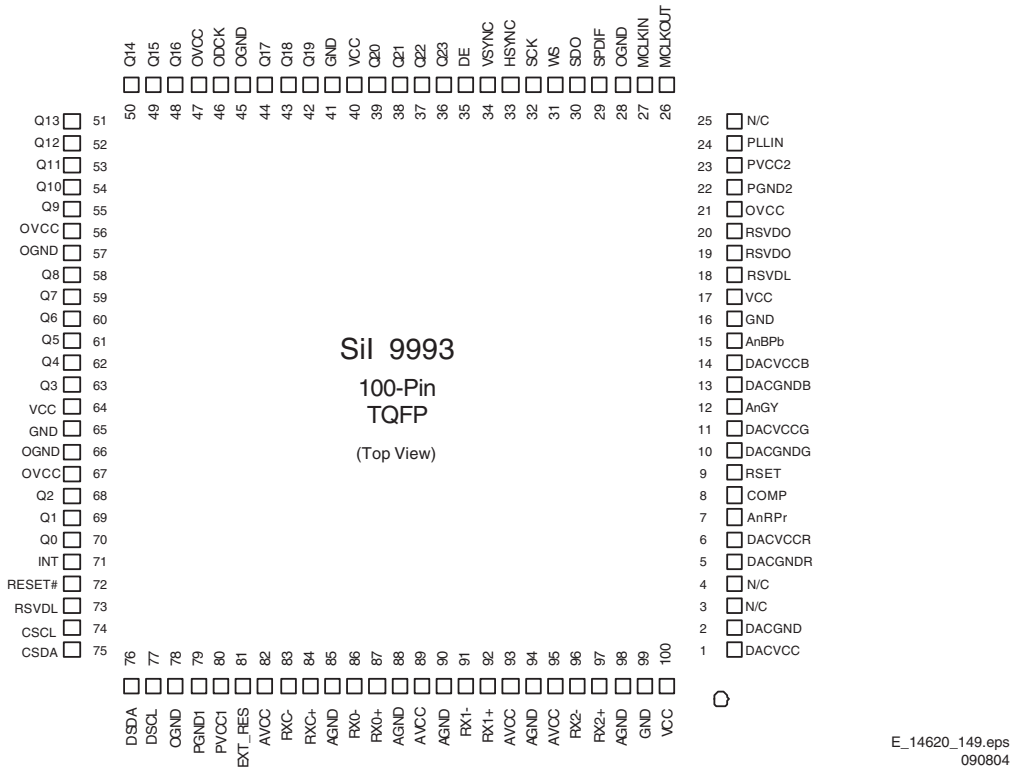

Figure 9-7 Internal Block Diagram and Pin Configuration

10. Spare Parts List

Set Level

Various

1104▲	8204 000 77241	PDP S42SD-YDO5
1104▲	8204 000 77261	PDP S37SD-YDO2
8303	3104 311 06691	Cable 10P/340/10P
8303	3104 311 08821	Cable 10P/400/10P
8330	3104 311 06091	Cable 10p/680/10p
8344	3104 311 07211	Cable 3P/560/3P
8346	3104 311 07001	Cable 11P/400/11P
8350	3104 311 08841	Cable 31P/220/31P
8352	3104 311 07381	Cable 9P/220/9P

Small Signal Panel [A]

Various

0601	3104 317 07891	Softw. (check Prod.Surv.)
1001	2422 543 01414	Crystal 24M576
1026	3104 328 33151	Side I/O assy
1062	2422 549 00149	Socket 3P m
1101	2422 025 18133	Socket SCART
1102	2422 025 18133	Socket SCART
1105	2422 026 05462	Socket CHINCH 4p f
1301	2422 025 16835	Connector 3p m
1302▲	3139 147 19801	Tuner UV1318S/A IH -3
1328	2422 549 44372	SAW 38.9MHz K3953L
1330	2422 549 44369	SAW 38.9MHz K9656L
1401	2422 543 01133	Xtal 14.32MHz 20pF
1402	2422 025 10768	Connector 3p m
1450	2422 025 18427	Connector 31p f
1681	2422 025 16835	Connector 3p m
1687	2438 031 00416	Connector 15p f
1752	2422 025 10769	Connector 9p m
1860	2422 549 45325	Bead 67Ω at 100MHz
1861	2422 549 45325	Bead 67Ω at 100MHz
1862	2422 549 45325	Bead 67Ω at 100MHz
1863	2422 549 45325	Bead 67Ω at 100MHz
1864	2422 549 45325	Bead 67Ω at 100MHz
8321	3122 358 76331	Tree assy M91-CP91
8336	3104 311 07111	Cable 11P/340/11P

⊣⊢

2000	2022 552 05682	2.2µF 10% 6.3V
2001	2020 552 96718	220nF 10% 6.3V 0402
2002	4822 124 23002	10µF 16V
2003	2238 869 15109	10pF 5% 50V 0402
2004	2020 552 96718	220nF 10% 6.3V 0402
2005	3198 035 71040	100nF 10% 16V 0402
2006	3198 034 06880	6.8pF 1% 50V 0402
2007	3198 034 06880	6.8pF 1% 50V 0402
2008	3198 017 44740	470nF 10V 0603
2009	3198 017 41050	1µF 10V 0603
2010	3198 035 26820	6.8nF 10% 16V 0402
2011	2020 552 96718	220nF 10% 6.3V 0402
2012	4822 124 12095	100µF 20% 16V
2013	3198 035 71040	100nF 10% 16V 0402
2014	3198 035 71040	100nF 10% 16V 0402
2015	3198 035 71040	100nF 10% 16V 0402
2016	3198 035 71040	100nF 10% 16V 0402
2017	3198 035 71040	100nF 10% 16V 0402
2018	3198 035 71040	100nF 10% 16V 0402
2019	4822 124 80151	47µF 16V
2020	2238 869 15101	100pF 5% 50V 0402
2021	2020 552 96628	10nF 10% 16V 0402
2022	3198 035 02210	220pF 5% 50V 0402
2023	3198 035 71040	100nF 10% 16V 0402
2024	4822 124 12095	100µF 20% 16V
2025	3198 035 71040	100nF 10% 16V 0402
2026	3198 035 71040	100nF 10% 16V 0402
2027	3198 035 71040	100nF 10% 16V 0402
2028	2020 552 96628	10nF 10% 16V 0402
2029	3198 035 71040	100nF 10% 16V 0402
2030	3198 035 71040	100nF 10% 16V 0402
2031	3198 035 71040	100nF 10% 16V 0402
2032	3198 035 71040	100nF 10% 16V 0402
2033	2020 552 96718	220nF 10% 6.3V 0402
2034	2020 552 00002	3.3nF 2% 50V 0805
2035	2020 552 96656	10µF 20% 25V 1210
2036	2020 552 96807	1µF 10% 10V 0603
2037	2020 552 96807	1µF 10% 10V 0603
2040	4822 124 23002	10µF 16V
2041	2020 552 96718	220nF 10% 6.3V 0402
2042	2020 552 00002	3.3nF 2% 50V 0805
2043	3198 035 71040	100nF 10% 16V 0402
2044	2020 552 96718	220nF 10% 6.3V 0402
2045	2238 869 15109	10pF 5% 50V 0402
2046	2238 869 15109	10pF 5% 50V 0402
2047	2020 552 96628	10nF 10% 16V 0402
2048	2238 869 15109	10pF 5% 50V 0402
2049	2238 869 15109	10pF 5% 50V 0402
2050	2238 869 15109	10pF 5% 50V 0402
2051	2020 552 00002	3.3nF 2% 50V 0805
2053	2020 552 96618	1nF 10% 50V 0402
2054	2020 552 96632	22nF 10% 16V 0402
2055	4822 126 14519	22pF 5% 50V 0402
2056	3198 035 71040	100nF 10% 16V 0402
2057	2238 869 15109	10pF 5% 50V 0402
2058	2238 869 15109	10pF 5% 50V 0402
2059	2238 869 15109	10pF 5% 50V 0402
2060	3198 035 71040	100nF 10% 16V 0402
2061	4822 124 23002	10µF 16V
2062	2238 869 15109	10pF 5% 50V 0402
2063	3198 017 31540	150nF 10V 0603
2064	3198 017 41050	1µF 10V 0603
2067	2238 869 15109	10pF 5% 50V 0402
2068	2020 552 96718	220nF 10% 6.3V 0402
2069	2238 869 15109	10pF 5% 50V 0402
2070	2020 552 96834	1µF 20% 6.3V 0402
2071	4822 124 12095	100µF 20% 16V
2072	4822 126 14076	220nF +80/-20% 25V
2073	2020 552 96618	1nF 10% 50V 0402
2074	2020 552 96718	220nF 10% 6.3V 0402
2076	2020 552 96718	220nF 10% 6.3V 0402
2077	2020 552 96834	1µF 20% 6.3V 0402
2078	2238 869 15101	100pF 5% 50V 0402
2079	2238 869 15109	10pF 5% 50V 0402
2080	2238 869 15109	10pF 5% 50V 0402
2081	2238 869 15109	10pF 5% 50V 0402
2082	2020 552 96618	1nF 10% 50V 0402
2084	2020 552 96718	220nF 10% 6.3V 0402
2085	2020 552 96618	1nF 10% 50V 0402
2086	2020 552 96618	1nF 10% 50V 0402
2087	2238 869 15109	10pF 5% 50V 0402
2088	2238 869 15109	10pF 5% 50V 0402
2089	2020 552 96618	1nF 10% 50V 0402
2090	2238 869 15109	10pF 5% 50V 0402
2091	2238 869 15109	10pF 5% 50V 0402
2092	2238 869 15109	10pF 5% 50V 0402
2093	2238 869 15109	10pF 5% 50V 0402
2094	2238 869 15109	10pF 5% 50V 0402
2095	2238 869 15109	10pF 5% 50V 0402
2096	2238 869 15109	10pF 5% 50V 0402
2097	2238 869 15109	10pF 5% 50V 0402
2098	2238 869 15109	10pF 5% 50V 0402
2099	2020 552 96618	1nF 10% 50V 0402
2101	4822 126 14241	330pF 0603 50V
2103	4822 126 14241	330pF 0603 50V
2104	2020 552 96807	1µF 10% 10V 0603
2105	4822 126 14241	330pF 0603 50V
2107	4822 126 14241	330pF 0603 50V
2108	2020 552 96807	1µF 10% 10V 0603
2109	4822 126 13881	470pF 5% 50V
2110	4822 126 13881	470pF 5% 50V
2111	4822 126 13881	470pF 5% 50V
2112	4822 126 13881	470pF 5% 50V
2127	4822 126 14241	330pF 0603 50V
2128	2020 552 96807	1µF 10% 10V 0603
2129	4822 126 14241	330pF 0603 50V
2131	4822 126 14241	330pF 0603 50V
2132	2020 552 96807	1µF 10% 10V 0603
2133	4822 126 14241	330pF 0603 50V
2134	4822 126 13881	470pF 5% 50V
2135	4822 126 13881	470pF 5% 50V
2136	4822 126 13881	470pF 5% 50V
2137	4822 126 13881	470pF 5% 50V
2138	3198 017 41050	1µF 10V 0603
2152	4822 126 14241	330pF 0603 50V
2155	4822 126 14241	330pF 0603 50V
2169	4822 124 23002	10µF 16V
2251	2238 869 15109	10pF 5% 50V 0402
2252	2238 869 15109	10pF 5% 50V 0402
2253	4822 124 23002	10µF 16V
2254	4822 124 23002	10µF 16V
2255	2238 869 15109	10pF 5% 50V 0402
2262	4822 124 80151	47µF 16V
2263	2020 552 96656	10µF 20% 25V 1210
2264	2020 552 96656	10µF 20% 25V 1210
2265	3198 035 02210	220pF 5% 50V 0402
2266	2020 552 96632	22nF 10% 16V 0402
2268	2020 012 93795	470µF 20% 16V
2269	2020 012 93795	470µF 20% 16V
2271	2020 552 96628	10nF 10% 16V 0402
2302	4822 122 33761	22pF 5% 50V
2303	4822 122 33761	22pF 5% 50V
2307	3198 024 44730	47nF 50V 0603
2308	3198 030 82280	2.2µF 20% 50V
2309	2020 021 91871	470µF 20% 16V
2311	4822 124 12095	100µF 20% 16V
2321	5322 126 11583	10nF 10% 50V 0603
2324	5322 126 11583	10nF 10% 50V 0603
2355	3198 030 82280	2.2µF 20% 50V
2356	3198 030 82280	2.2µF 20% 50V
2357	3198 035 71040	100nF 10% 16V 0402
2358	2020 552 96625	3.3nF 10% 50V 0402
2359	2020 552 96628	10nF 10% 16V 0402
2370	2020 552 96834	1µF 20% 6.3V 0402
2371	2020 552 96834	1µF 20% 6.3V 0402
2372	2020 552 96618	1nF 10% 50V 0402
2373	2020 552 96618	1nF 10% 50V 0402
2374	3198 035 71040	100nF 10% 16V 0402
2375	4822 124 12082	10µF 20% 50V
2376	3198 017 41050	1µF 10V 0603
2377	3198 017 41050	1µF 10V 0603
2378	2020 552 96718	220nF 10% 6.3V 0402
2380	4822 124 12095	100µF 20% 16V
2381	3198 035 71040	100nF 10% 16V 0402
2382	2020 021 91871	470µF 20% 16V
2386	3198 017 41050	1µF 10V 0603
2387	4822 126 14324	33pF 5% 50V 0402
2388	4822 126 14324	33pF 5% 50V 0402
2392	3198 017 41050	1µF 10V 0603
2394	3198 035 71040	100nF 10% 16V 0402
2395	3198 035 71040	100nF 10% 16V 0402
2396	4822 124 23002	10µF 16V
2397	2020 552 96834	1µF 20% 6.3V 0402
2398	2020 552 96834	1µF 20% 6.3V 0402
2401	4822 124 80151	47µF 16V
2402	4822 124 80151	47µF 16V
2403	3198 035 71040	100nF 10% 16V 0402
2404	3198 035 71040	100nF 10% 16V 0402
2405	3198 035 71040	100nF 10% 16V 0402
2406	3198 035 71040	100nF 10% 16V 0402
2407	3198 035 71040	100nF 10% 16V 0402
2408	3198 035 71040	100nF 10% 16V 0402
2409	3198 035 71040	100nF 10% 16V 0402
2410	3198 035 71040	100nF 10% 16V 0402
2411	3198 035 71040	100nF 10% 16V 0402
2412	3198 035 71040	100nF 10% 16V 0402
2413	3198 035 71040	100nF 10% 16V 0402
2414	3198 035 71040	100nF 10% 16V 0402
2415	3198 035 71040	100nF 10% 16V 0402
2416	3198 035 71040	100nF 10% 16V 0402
2417	4822 124 80151	47µF 16V
2418	4822 124 80151	47µF 16V
2419	3198 035 71040	100nF 10% 16V 0402
2420	3198 035 71040	100nF 10% 16V 0402
2421	3198 035 71040	100nF 10% 16V 0402
2422	3198 035 71040	100nF 10% 16V 0402
2423	3198 035 71040	100nF 10% 16V 0402
2424	3198 035 71040	100nF 10% 16V 0402
2425	3198 035 71040	100nF 10% 16V 0402
2426	3198 035 71040	100nF 10% 16V 0402
2427	3198 035 71040	100nF 10% 16V 0402
2428	3198 035 71040	100nF 10% 16V 0402
2429	3198 035 71040	100nF 10% 16V 0402
2430	3198 035 71040	100nF 10% 16V 0402
2431	3198 035 71040	100nF 10% 16V 0402
2432	3198 035 71040	100nF 10% 16V 0402
2433	3198 035 71040	100nF 10% 16V 0402
2434	4822 124 80151	47µF 16V
2435	4822 124 80151	47µF 16V
2436	3198 035 71040	100nF 10% 16V 0402
2437	3198 035 71040	100nF 10% 16V 0402
2438	3198 035 71040	100nF 10% 16V 0402
2439	3198 035 71040	100nF 10% 16V 0402
2440	3198 035 71040	100nF 10% 16V 0402
2441	3198 035 71040	100nF 10% 16V 0402
2442	3198 035 71040	100nF 10% 16V 0402
2443	3198 035 71040	100nF 10% 16V 0402
2444	3198 035 71040	100nF 10% 16V 0402
2445	3198 035 71040	100nF 10% 16V 0402
2446	3198 035 71040	100nF 10% 16V 0402
2447	3198 035 71040	100nF 10% 16V 0402
2448	3198 035 71040	100nF 10% 16V 0402
2449	3198 035 71040	100nF 10% 16V 0402
2450	3198 035 71040	100nF 10% 16V 0402
2451	4822 124 80151	47µF 16V
2452	3198 035 71040	100nF 10% 16V 0402
2453	3198 035 71040	100nF 10% 16V 0402
2454	3198 035 71040	100nF 10% 16V 0402
2455	3198 035 71040	100nF 10% 16V 0402

2456	3198 035 71040	100nF 10% 16V 0402
2461	3198 035 71040	100nF 10% 16V 0402
2462	3198 035 71040	100nF 10% 16V 0402
2463	3198 035 71040	100nF 10% 16V 0402
2464	3198 035 71040	100nF 10% 16V 0402
2465	5322 124 41945	22µF 20% 35V
2466	3198 035 71040	100nF 10% 16V 0402
2467	3198 035 71040	100nF 10% 16V 0402
2468	3198 035 71040	100nF 10% 16V 0402
2469	3198 035 71040	100nF 10% 16V 0402
2470	5322 124 41945	22µF 20% 35V
2471	3198 035 71040	100nF 10% 16V 0402
2472	3198 035 71040	100nF 10% 16V 0402
2473	3198 035 71040	100nF 10% 16V 0402
2474	3198 035 71040	100nF 10% 16V 0402
2475	3198 035 71040	100nF 10% 16V 0402
2476	3198 035 71040	100nF 10% 16V 0402
2477	3198 035 71040	100nF 10% 16V 0402
2478	5322 124 41945	22µF 20% 35V
2479	3198 035 71040	100nF 10% 16V 0402
2480	3198 035 71040	100nF 10% 16V 0402
2481	3198 035 71040	100nF 10% 16V 0402
2482	5322 124 41945	22µF 20% 35V
2483	3198 035 71040	100nF 10% 16V 0402
2484	3198 035 71040	100nF 10% 16V 0402
2485	3198 035 71040	100nF 10% 16V 0402
2486	3198 035 71040	100nF 10% 16V 0402
2487	4822 126 14519	22pF 5% 50V 0402
2488	4822 126 14519	22pF 5% 50V 0402
2490	2238 586 59812	100nF 20% 50V 0603
2491	2238 586 59812	100nF 20% 50V 0603
2492	2238 586 59812	100nF 20% 50V 0603
2495	4822 124 80151	47µF 16V
2496	3198 035 71040	100nF 10% 16V 0402
2501	4822 124 80151	47µF 16V
2502	4822 124 11131	47µF 6.3V
2503	3198 035 71040	100nF 10% 16V 0402
2504	3198 035 71040	100nF 10% 16V 0402
2505	3198 035 71040	100nF 10% 16V 0402
2506	3198 035 71040	100nF 10% 16V 0402
2507	3198 035 71040	100nF 10% 16V 0402
2508	3198 035 71040	100nF 10% 16V 0402
2509	3198 035 71040	100nF 10% 16V 0402
2510	3198 035 71040	100nF 10% 16V 0402
2511	3198 035 71040	100nF 10% 16V 0402
2512	3198 035 71040	100nF 10% 16V 0402
2513	3198 035 71040	100nF 10% 16V 0402
2514	3198 035 71040	100nF 10% 16V 0402
2515	3198 035 71040	100nF 10% 16V 0402
2516	3198 035 71040	100nF 10% 16V 0402
2517	3198 035 71040	100nF 10% 16V 0402
2526	5322 124 41945	22µF 20% 35V
2530	4822 124 23002	10µF 16V
2531	3198 035 71040	100nF 10% 16V 0402
2532	3198 035 71040	100nF 10% 16V 0402
2533	3198 035 71040	100nF 10% 16V 0402
2560	3198 035 71040	100nF 10% 16V 0402
2561	4822 124 12095	100µF 20% 16V
2562	3198 035 71040	100nF 10% 16V 0402
2563	3198 035 14720	4.7nF 5% 25V 0402
2564	2020 552 96656	10µF 20% 25V 1210
2580	3198 035 71040	100nF 10% 16V 0402
2581	3198 035 71040	100nF 10% 16V 0402
2582	3198 035 71040	100nF 10% 16V 0402
2583	3198 035 71040	100nF 10% 16V 0402
2584	3198 035 71040	100nF 10% 16V 0402
2585	2238 869 75829	82pF 5% 50V 0402
2586	2238 869 75829	82pF 5% 50V 0402
2587	3198 035 03310	330pF 5% 50V 0402
2588	3198 035 04710	470pF 50V 0402
2605	3198 035 71040	100nF 10% 16V 0402
2606	3198 035 71040	100nF 10% 16V 0402
2607	3198 035 71040	100nF 10% 16V 0402
2608	3198 035 71040	100nF 10% 16V 0402
2609	3198 035 71040	100nF 10% 16V 0402
2610	3198 035 71040	100nF 10% 16V 0402
2611	4822 124 11131	47µF 6.3V
2612	2020 552 96628	10nF 10% 16V 0402
2613	2020 552 96628	10nF 10% 16V 0402
2614	2020 552 96628	10nF 10% 16V 0402
2615	2020 552 96628	10nF 10% 16V 0402
2616	2020 552 96628	10nF 10% 16V 0402
2617	2020 552 96628	10nF 10% 16V 0402
2618	2020 552 96628	10nF 10% 16V 0402
2619	4822 126 14324	33pF 5% 50V 0402
2620	2020 552 96807	1µF 10% 10V 0603
2621	2020 552 96834	1µF 20% 6.3V 0402
2622	2020 552 96834	1µF 20% 6.3V 0402
2623	2020 552 96834	1µF 20% 6.3V 0402
2624	3198 017 44740	470nF 10V 0603
2625	3198 017 44740	470nF 10V 0603
2626	3198 017 44740	470nF 10V 0603
2630	2020 552 96834	1µF 20% 6.3V 0402
2631	2020 552 96834	1µF 20% 6.3V 0402
2632	2020 552 96834	1µF 20% 6.3V 0402
2633	2020 552 96834	1µF 20% 6.3V 0402
2634	2020 552 96834	1µF 20% 6.3V 0402
2635	2020 552 96834	1µF 20% 6.3V 0402
2636	3198 035 71040	100nF 10% 16V 0402
2681	2020 552 94427	100pF 5% 50V
2686	2020 552 94427	100pF 5% 50V
2688	2238 586 59812	100nF 20% 50V 0603
2693	2238 586 59812	100nF 20% 50V 0603
2698	2020 552 94427	100pF 5% 50V
2699	2020 552 94427	100pF 5% 50V
2702	2020 552 96834	1µF 20% 6.3V 0402
2707	2020 021 91871	470µF 20% 16V
2708	2020 552 96834	1µF 20% 6.3V 0402
2710	3198 035 04710	470pF 50V 0402
2711	3198 035 04710	470pF 50V 0402
2713	2238 586 59812	100nF 20% 50V 0603
2714	2020 021 91871	470µF 20% 16V
2715	2020 021 91871	470µF 20% 16V
2719	2238 586 59812	100nF 20% 50V 0603
2720	2238 869 15109	10pF 5% 50V 0402
2743	2020 552 96834	1µF 20% 6.3V 0402
2744	2020 552 96834	1µF 20% 6.3V 0402
2747	2238 869 15101	100pF 5% 50V 0402
2748	2238 869 15101	100pF 5% 50V 0402
2749	2238 869 15101	100pF 5% 50V 0402
2750	2238 869 15101	100pF 5% 50V 0402
2784	4822 126 14241	330pF 0603 50V
2785	4822 126 14241	330pF 0603 50V
2847	3198 017 41050	1µF 10V 0603
2848	3198 017 41050	1µF 10V 0603
2860	2238 869 15109	10pF 5% 50V 0402
2861	2238 869 15109	10pF 5% 50V 0402
2862	2238 869 15109	10pF 5% 50V 0402
2863	2238 869 15109	10pF 5% 50V 0402
2864	2238 869 15109	10pF 5% 50V 0402
2865	2238 869 15109	10pF 5% 50V 0402
2866	2238 869 15109	10pF 5% 50V 0402
2867	2238 869 15109	10pF 5% 50V 0402
2868	2238 869 15109	10pF 5% 50V 0402
2869	2238 869 15109	10pF 5% 50V 0402
2870	2238 869 15109	10pF 5% 50V 0402
2871	2238 869 15109	10pF 5% 50V 0402
2872	2238 586 59812	100nF 20% 50V 0603
2877	2238 869 15109	10pF 5% 50V 0402
2880	2238 869 15109	10pF 5% 50V 0402
2882	2238 869 15109	10pF 5% 50V 0402
2883	2238 869 15109	10pF 5% 50V 0402
2884	2020 552 96628	10nF 10% 16V 0402
2885	2238 869 15109	10pF 5% 50V 0402
2886	4822 124 23002	10µF 16V
2887	2238 869 15109	10pF 5% 50V 0402
2889	2238 869 15109	10pF 5% 50V 0402
2910	3198 035 04710	470pF 50V 0402
2911	3198 030 72290	22µF 20% 35V
2920	4822 124 80151	47µF 16V
2921	4822 124 80151	47µF 16V
2930	2020 021 91871	470µF 20% 16V
2931	3198 035 04710	470pF 50V 0402
2933	2020 021 91871	470µF 20% 16V
2934	2020 552 96793	4.7nF 10% 50V 0402
2935	2020 021 91871	470µF 20% 16V
2953	2020 021 91871	470µF 20% 16V
2955	3198 035 14720	4.7nF 5% 25V 0402
2956	3198 035 02210	220pF 5% 50V 0402
2957	2020 021 91871	470µF 20% 16V
2958	2020 021 91871	470µF 20% 16V
2992	3198 035 71040	100nF 10% 16V 0402
2993	2020 552 96618	1nF 10% 50V 0402
2994	2020 021 91871	470µF 20% 16V
2995	3198 035 71040	100nF 10% 16V 0402
2996	4822 124 80151	47µF 16V

–WW–

3000	3198 031 05620	5.6kΩ 5% 0.01W 0402
3001	2322 702 70398	3.9Ω 5% 0603
3002	4822 117 13601	22kΩ 5% 0402
3003	2322 702 70398	3.9Ω 5% 0603
3004	4822 117 13601	22kΩ 5% 0402
3005	3198 031 05620	5.6kΩ 5% 0.01W 0402
3006	4822 117 13545	100Ω 1% 0402
3007	3198 031 04720	4.7kΩ 5% 0402
3008	3198 031 04730	47Ω 5% 0402
3009	4822 117 11297	100kΩ 5% 0.1W
3010	4822 117 13548	1kΩ 5% 0402
3011	4822 117 13543	470Ω 5% 0402
3013	4822 117 13545	100Ω 1% 0402
3015	4822 117 13605	Jumper 0402
3017	4822 117 13605	Jumper 0402
3019	4822 117 13545	100Ω 1% 0402
3020	4822 117 13548	1kΩ 5% 0402
3021	2322 706 72702	2.7kΩ 1% 0402
3022	4822 117 13606	10kΩ 5% 0.01W 0402
3023	4822 117 13601	22kΩ 5% 0402
3024	3198 031 01090	10Ω 5% 0.01W 0402
3025	3198 031 01090	10Ω 5% 0.01W 0402
3026	3198 031 06890	68Ω 5% 0402
3027	3198 031 01090	10Ω 5% 0.01W 0402
3028	4822 117 11297	100kΩ 5% 0.1W
3029	4822 117 13548	1kΩ 5% 0402
3030	4822 117 11297	100kΩ 5% 0.1W
3032	3198 031 02240	220kΩ 5% 0.1W 0402
3035	4822 117 13545	100Ω 1% 0402
3037	3198 031 04730	47Ω 5% 0402
3038	3198 031 04730	47Ω 5% 0402
3040	3198 031 06830	68kΩ 5% 0.01W 0402
3048	4822 117 13606	10kΩ 5% 0.01W 0402
3049	4822 117 13545	100Ω 1% 0402
3050	4822 117 13545	100Ω 1% 0402
3051	4822 117 13545	100Ω 1% 0402
3052	4822 117 13605	Jumper 0402
3056	3198 031 04720	4.7kΩ 5% 0402
3057	4822 117 13545	100Ω 1% 0402
3058	4822 117 13543	470Ω 5% 0402
3059	4822 117 13548	1kΩ 5% 0402
3060	3198 031 03930	39kΩ 5% 0402
3063	3198 031 06890	68Ω 5% 0402
3065	3198 031 06810	680Ω 5% 0.01W 0402
3066	3198 031 06890	68Ω 5% 0402
3067	3198 031 01090	10Ω 5% 0.01W 0402
3068	3198 031 06890	68Ω 5% 0402
3069	4822 117 13601	22kΩ 5% 0402
3070	4822 117 13545	100Ω 1% 0402
3072	3198 031 06890	68Ω 5% 0402
3073	3198 031 01530	15kΩ 5% 0.01W 0402
3074	4822 117 11297	100kΩ 5% 0.1W
3075	3198 031 04720	4.7kΩ 5% 0402
3077	3198 031 04720	4.7kΩ 5% 0402
3078	3198 031 04720	4.7kΩ 5% 0402
3079	3198 031 04720	4.7kΩ 5% 0402
3080	5322 117 13034	1.5kΩ 1% 0.063W 0603
3081	4822 117 13545	100Ω 1% 0402
3082	3198 031 04720	4.7kΩ 5% 0402
3083	3198 031 04720	4.7kΩ 5% 0402
3084	4822 117 13545	100Ω 1% 0402
3085	3198 031 04720	4.7kΩ 5% 0402
3086	4822 117 13602	2.2kΩ 5% 0.01W 0402
3087	4822 117 13606	10kΩ 5% 0.01W 0402
3088	3198 031 03320	3.3kΩ 5% 0402
3089	3198 031 01540	150kΩ 5% 0402
3091	4822 117 13545	100Ω 1% 0402
3092	3198 031 04720	4.7kΩ 5% 0402
3093	3198 031 04720	4.7kΩ 5% 0402
3094	3198 031 01090	10Ω 5% 0.01W 0402
3096	3198 031 03320	3.3kΩ 5% 0402
3097	3198 031 04720	4.7kΩ 5% 0402
3098	4822 117 13545	100Ω 1% 0402
3101	4822 051 30151	150Ω 5% 0.062W
3102	4822 117 12891	220kΩ 1%
3103	4822 051 30223	22kΩ 5% 0.062W
3104	4822 117 12925	47kΩ 1% 0.063W 0603
3105	4822 051 30151	150Ω 5% 0.062W
3106	4822 117 12891	220kΩ 1%
3107	4822 117 12925	47kΩ 1% 0.063W 0603
3108	4822 051 30223	22kΩ 5% 0.062W
3109	4822 051 30759	75Ω 5% 0.062W
3110	4822 051 30331	330Ω 5% 0.062W
3111	4822 051 30273	27kΩ 5% 0.062W
3112	4822 051 30682	6.8Ω 5% 0.062W
3113	4822 051 30759	75Ω 5% 0.062W
3114	4822 051 30331	330Ω 5% 0.062W
3115	4822 051 30759	75Ω 5% 0.062W
3116	4822 051 30331	330Ω 5% 0.062W
3117	4822 051 30331	330Ω 5% 0.062W
3118	4822 051 30759	75Ω 5% 0.062W
3119	4822 051 30689	68Ω 5% 0.063W 0603
3120	4822 051 30008	Jumper 0603
3121	4822 051 30759	75Ω 5% 0.062W
3122	4822 051 30331	330Ω 5% 0.062W
3123	4822 051 30102	1kΩ 5% 0.062W
3124	4822 051 30151	150Ω 5% 0.062W
3125	4822 051 30151	150Ω 5% 0.062W
3126	4822 117 12891	220kΩ 1%
3127	4822 051 30151	150Ω 5% 0.062W
3128	4822 117 12925	47kΩ 1% 0.063W 0603
3129	4822 051 30151	150Ω 5% 0.062W
3130	4822 117 12891	220kΩ 1%
3131	4822 051 30151	150Ω 5% 0.062W
3132	4822 117 12925	47kΩ 1% 0.063W 0603
3133	4822 051 30223	22kΩ 5% 0.062W
3134	4822 051 30682	6.8Ω 5% 0.062W
3135	4822 051 30273	27kΩ 5% 0.062W
3136	4822 051 30331	330Ω 5% 0.062W
3137	4822 051 30759	75Ω 5% 0.062W
3138	4822 117 13632	100kΩ 1% 0603 0.62W
3139	4822 117 13632	100kΩ 1% 0603 0.62W

3140	4822 051 30689	68Ω 5% 0.063W 0603
3141	4822 051 30102	1kΩ 5% 0.062W
3142	4822 051 30331	330Ω 5% 0.062W
3143	4822 051 30759	75Ω 5% 0.062W
3144	4822 051 30151	150Ω 5% 0.062W
3145	4822 051 30151	150Ω 5% 0.062W
3146	4822 051 30151	150Ω 5% 0.062W
3147	4822 051 30151	150Ω 5% 0.062W
3148	4822 051 30151	150Ω 5% 0.062W
3149	4822 051 30223	22kΩ 5% 0.062W
3150	4822 051 30151	150Ω 5% 0.062W
3151	4822 051 30151	150Ω 5% 0.062W
3152	4822 117 12891	220kΩ 1%
3153	4822 051 30151	150Ω 5% 0.062W
3155	4822 117 12891	220kΩ 1%
3156	4822 051 30151	150Ω 5% 0.062W
3169	4822 051 30479	47Ω 5% 0.062W
3251	4822 117 11151	1Ω 5%
3259	4822 117 13606	10kΩ 5% 0.01W 0402
3260	3198 031 06820	6.8kΩ 5% 0.01W 0402
3266	3198 031 04720	4.7kΩ 5% 0402
3267	5322 117 13031	5.6kΩ 1% 0.063W 0603
3268	2322 704 63302	3.3kΩ 1% 0603
3270	4822 117 13602	2.2kΩ 5% 0.01W 0402
3271	4822 117 13543	470Ω 5% 0402
3273	3198 031 02240	220kΩ 5% 0.1W 0402
3274	4822 117 13601	22kΩ 5% 0402
3302	4822 051 30101	100Ω 5% 0.062W
3303	4822 051 30101	100Ω 5% 0.062W
3304	4822 117 13606	10kΩ 5% 0.01W 0402
3305	4822 117 13606	10kΩ 5% 0.01W 0402
3309	4822 117 13606	10kΩ 5% 0.01W 0402
3311	4822 051 30103	10kΩ 5% 0.062W
3319	4822 051 30273	27kΩ 5% 0.062W
3320	4822 051 30183	18kΩ 5% 0.062W
3321	4822 051 30222	2.2kΩ 5% 0.062W
3322	4822 051 30682	6.8Ω 5% 0.062W
3323	4822 051 30222	2.2kΩ 5% 0.062W
3327	4822 117 13548	1kΩ 5% 0402
3328	4822 117 13545	100Ω 1% 0402
3329	4822 117 13545	100Ω 1% 0402
3340	4822 117 13601	22kΩ 5% 0402
3342	4822 117 13606	10kΩ 5% 0.01W 0402
3343	3198 031 04720	4.7kΩ 5% 0402
3344	4822 117 13548	1kΩ 5% 0402
3345	3198 031 04720	4.7kΩ 5% 0402
3346	2322 706 75603	56kΩ 1% 0402
3347	3198 031 08210	820Ω 5% 0,5W
3348	3198 031 04720	4.7kΩ 5% 0402
3349	3198 031 01820	1.8kΩ 5% 0.01W 0402
3357	4822 117 13548	1kΩ 5% 0402
3358	4822 117 13545	100Ω 1% 0402
3359	3198 031 03910	390Ω 1% 0402
3370	3198 031 06810	680Ω 5% 0.01W 0402
3371	4822 117 13545	100Ω 1% 0402
3372	4822 117 13545	100Ω 1% 0402
3374	5322 117 11726	10Ω 5%
3378	4822 117 13545	100Ω 1% 0402
3380	3198 031 05620	5.6kΩ 5% 0.01W 0402
3381	3198 031 05620	5.6kΩ 5% 0.01W 0402
3382	3198 031 05620	5.6kΩ 5% 0.01W 0402
3383	3198 031 05620	5.6kΩ 5% 0.01W 0402
3386	4822 117 13545	100Ω 1% 0402
3389	4822 117 13545	100Ω 1% 0402
3390	4822 117 13545	100Ω 1% 0402
3391	4822 117 13545	100Ω 1% 0402
3392	4822 117 13545	100Ω 1% 0402
3393	4822 117 13545	100Ω 1% 0402
3394	3198 031 07590	75Ω 5% 0402
3401	2350 035 10229	4 x 22Ω 5% 1206
3402	2350 035 10229	4 x 22Ω 5% 1206
3403	2350 035 10229	4 x 22Ω 5% 1206
3404	2350 035 10229	4 x 22Ω 5% 1206
3405	2350 035 10229	4 x 22Ω 5% 1206
3406	2350 035 10229	4 x 22Ω 5% 1206
3407	2350 035 10229	4 x 22Ω 5% 1206
3408	2350 035 10229	4 x 22Ω 5% 1206
3409	2350 035 10229	4 x 22Ω 5% 1206
3410	2350 035 10229	4 x 22Ω 5% 1206
3411	2350 035 10229	4 x 22Ω 5% 1206
3412	2350 035 10229	4 x 22Ω 5% 1206
3413	2350 035 10229	4 x 22Ω 5% 1206
3414	3198 031 02290	22Ω 5% 0.1W 0402
3415	3198 031 01090	10Ω 5% 0.01W 0402
3422	3198 031 02290	22Ω 5% 0.1W 0402
3423	3198 031 03320	3.3kΩ 5% 0402
3424	2322 704 61501	150Ω 1% 0603
3425	4822 117 13606	10kΩ 5% 0.01W 0402
3426	3198 031 03320	3.3kΩ 5% 0402
3428	4822 117 13606	10kΩ 5% 0.01W 0402
3429	4822 117 13606	10kΩ 5% 0.01W 0402
3432	4822 117 13606	10kΩ 5% 0.01W 0402
3433	4822 117 13606	10kΩ 5% 0.01W 0402
3436	4822 117 13606	10kΩ 5% 0.01W 0402
3437	4822 117 13606	10kΩ 5% 0.01W 0402
3438	3198 031 11030	4 x 10kΩ 5% 1206
3439	3198 031 11030	4 x 10kΩ 5% 1206
3440	3198 031 11030	4 x 10kΩ 5% 1206
3441	3198 031 11030	4 x 10kΩ 5% 1206
3442	3198 031 11030	4 x 10kΩ 5% 1206
3443	4822 117 13606	10kΩ 5% 0.01W 0402
3446	5322 117 13017	100Ω 1% 0.063W 0603
3447	3198 031 02290	22Ω 5% 0.1W 0402
3448	3198 031 01090	10Ω 5% 0.01W 0402
3501	4822 117 12706	10kΩ 1% 0.063W 0603
3502	4822 117 12706	10kΩ 1% 0.063W 0603
3503	2322 704 61501	150Ω 1% 0603
3531	4822 117 13606	10kΩ 5% 0.01W 0402
3532	4822 117 13606	10kΩ 5% 0.01W 0402
3534	4822 117 13548	1kΩ 5% 0402
3536	4822 117 13606	10kΩ 5% 0.01W 0402
3538	3198 031 11030	4 x 10kΩ 5% 1206
3539	3198 031 11030	4 x 10kΩ 5% 1206
3540	3198 031 11030	4 x 10kΩ 5% 1206
3544	3198 031 11030	4 x 10kΩ 5% 1206
3545	3198 031 11030	4 x 10kΩ 5% 1206
3546	3198 031 11030	4 x 10kΩ 5% 1206
3547	3198 031 11030	4 x 10kΩ 5% 1206
3548	4822 117 13606	10kΩ 5% 0.01W 0402
3549	4822 051 30102	1kΩ 5% 0.062W
3550	4822 051 30102	1kΩ 5% 0.062W
3552	4822 051 30102	1kΩ 5% 0.062W
3553	4822 051 30102	1kΩ 5% 0.062W
3560	4822 117 11297	100kΩ 5% 0.1W
3561	4822 117 11297	100kΩ 5% 0.1W
3562	4822 117 11297	100kΩ 5% 0.1W
3563	4822 117 13548	1kΩ 5% 0402
3564	3198 031 01220	1.2kΩ 5% 0.01W 0402
3565	4822 117 13548	1kΩ 5% 0402
3566	4822 117 13548	1kΩ 5% 0402
3567	4822 117 13548	1kΩ 5% 0402
3568	4822 117 13548	1kΩ 5% 0402
3579	4822 117 13548	1kΩ 5% 0402
3580	4822 117 13543	470Ω 5% 0402
3581	3198 031 04730	47Ω 5% 0402
3605	4822 117 13545	100Ω 1% 0402
3606	4822 117 13545	100Ω 1% 0402
3607	4822 117 13545	100Ω 1% 0402
3608	4822 117 13545	100Ω 1% 0402
3609	4822 117 13545	100Ω 1% 0402
3610	4822 117 13601	22kΩ 5% 0402
3612	4822 117 13543	470Ω 5% 0402
3613	3198 031 02290	22Ω 5% 0.1W 0402
3614	3198 031 02290	22Ω 5% 0.1W 0402
3615	3198 031 02290	22Ω 5% 0.1W 0402
3616	3198 031 02290	22Ω 5% 0.1W 0402
3617	3198 031 02290	22Ω 5% 0.1W 0402
3618	3198 031 02290	22Ω 5% 0.1W 0402
3619	3198 031 08210	820Ω 5% 0,5W
3620	4822 117 13632	100kΩ 1% 0603 0.62W
3621	4822 117 13601	22kΩ 5% 0402
3622	4822 117 13601	22kΩ 5% 0402
3623	4822 117 13601	22kΩ 5% 0402
3624	4822 117 13601	22kΩ 5% 0402
3625	4822 117 13601	22kΩ 5% 0402
3626	4822 117 13601	22kΩ 5% 0402
3633	4822 117 13545	100Ω 1% 0402
3634	4822 117 13545	100Ω 1% 0402
3635	4822 117 13545	100Ω 1% 0402
3638	4822 117 13545	100Ω 1% 0402
3639	4822 117 13545	100Ω 1% 0402
3641	4822 117 13597	330Ω 5% 0402 0.01W
3642	4822 117 13597	330Ω 5% 0402 0.01W
3643	4822 117 13597	330Ω 5% 0402 0.01W
3644	4822 117 13597	330Ω 5% 0402 0.01W
3645	4822 117 13597	330Ω 5% 0402 0.01W
3646	4822 117 13597	330Ω 5% 0402 0.01W
3680	4822 051 30222	2.2kΩ 5% 0.062W
3681	4822 051 30221	220Ω 5% 0.062W
3683	4822 051 30759	75Ω 5% 0.062W
3684	4822 051 30759	75Ω 5% 0.062W
3685	4822 051 30222	2.2kΩ 5% 0.062W
3686	4822 051 30221	220Ω 5% 0.062W
3687	4822 051 30759	75Ω 5% 0.062W
3689	4822 051 30101	100Ω 5% 0.062W
3693	4822 051 30103	10kΩ 5% 0.062W
3696	4822 051 30103	10kΩ 5% 0.062W
3697	4822 051 30103	10kΩ 5% 0.062W
3698	4822 051 30223	22kΩ 5% 0.062W
3699	4822 051 30223	22kΩ 5% 0.062W
3700	4822 117 12925	47kΩ 1% 0.063W 0603
3701	4822 117 13548	1kΩ 5% 0402
3702	3198 031 06820	6.8kΩ 5% 0.01W 0402
3703	4822 117 13606	10kΩ 5% 0.01W 0402
3704	4822 117 13548	1kΩ 5% 0402
3705	4822 117 13606	10kΩ 5% 0.01W 0402
3711	3198 031 03390	33Ω 1% 0402
3712	4822 117 13606	10kΩ 5% 0.01W 0402
3713	4822 117 13606	10kΩ 5% 0.01W 0402
3716	3198 031 01220	1.2kΩ 5% 0.01W 0402
3718	3198 031 03390	33Ω 1% 0402
3721	3198 031 01220	1.2kΩ 5% 0.01W 0402
3723	4822 117 13548	1kΩ 5% 0402
3724	4822 117 13606	10kΩ 5% 0.01W 0402
3728	3198 031 05620	5.6kΩ 5% 0.01W 0402
3729	3198 031 03320	3.3kΩ 5% 0402
3730	3198 031 03320	3.3kΩ 5% 0402
3731	4822 117 13543	470Ω 5% 0402
3732	4822 117 13548	1kΩ 5% 0402
3733	4822 117 13543	470Ω 5% 0402
3739	4822 117 13601	22kΩ 5% 0402
3740	4822 117 13601	22kΩ 5% 0402
3741	4822 117 11297	100kΩ 5% 0.1W
3742	4822 117 13601	22kΩ 5% 0402
3743	4822 117 13601	22kΩ 5% 0402
3745	4822 117 11297	100kΩ 5% 0.1W
3752	3198 031 01510	150Ω 5% 0.01W 0402
3753	3198 031 01510	150Ω 5% 0.01W 0402
3781	4822 117 12925	47kΩ 1% 0.063W 0603
3782	4822 051 30151	150Ω 5% 0.062W
3783	4822 051 30103	10kΩ 5% 0.062W
3784	4822 051 30102	1kΩ 5% 0.062W
3788	4822 051 30102	1kΩ 5% 0.062W
3836	4822 117 13606	10kΩ 5% 0.01W 0402
3838	4822 117 13606	10kΩ 5% 0.01W 0402
3870	3198 031 06890	68Ω 5% 0402
3871	3198 031 06890	68Ω 5% 0402
3877	3198 031 06890	68Ω 5% 0402
3883	3198 031 06890	68Ω 5% 0402
3885	3198 031 06890	68Ω 5% 0402
3886	4822 117 13606	10kΩ 5% 0.01W 0402
3887	4822 117 13606	10kΩ 5% 0.01W 0402
3910	4822 117 13602	2.2kΩ 5% 0.01W 0402
3911	4822 117 13548	1kΩ 5% 0402
3930	4822 117 12917	1Ω 5% 0.062W
3931	4822 117 12917	1Ω 5% 0.062W
3932	2322 704 61002	1kΩ 1%
3933	2322 704 63302	3.3kΩ 1% 0603
3951	4822 117 12917	1Ω 5% 0.062W
3952	4822 117 12917	1Ω 5% 0.062W
3953	2322 704 61002	1kΩ 1%
3954	2322 704 63302	3.3kΩ 1% 0603
4002	4822 117 13605	Jumper 0402
4005	4822 117 13605	Jumper 0402
4007	4822 117 13605	Jumper 0402
4008	4822 117 13605	Jumper 0402
4017	4822 117 13605	Jumper 0402
4018	4822 117 13605	Jumper 0402
4023	4822 117 13605	Jumper 0402
4062	4822 117 13605	Jumper 0402
4255	4822 117 13605	Jumper 0402
4327	4822 051 30008	Jumper 0603
4331	4822 051 30008	Jumper 0603
4333	4822 051 30008	Jumper 0603
4334	4822 051 30008	Jumper 0603
4360	4822 117 13605	Jumper 0402
4361	4822 117 13605	Jumper 0402
4362	4822 117 13605	Jumper 0402
4363	4822 117 13605	Jumper 0402
4580	4822 117 13605	Jumper 0402
4581	4822 117 13605	Jumper 0402
4583	4822 117 13605	Jumper 0402
4590	4822 117 13605	Jumper 0402
4601	4822 117 13605	Jumper 0402
4602	4822 117 13605	Jumper 0402
4603	4822 117 13605	Jumper 0402
4608	4822 117 13605	Jumper 0402
4708	4822 051 30008	Jumper 0603
4714	4822 117 13605	Jumper 0402
4720	4822 051 30008	Jumper 0603
4836	4822 051 30008	Jumper 0603
4838	4822 051 30008	Jumper 0603
4888	4822 117 13605	Jumper 0402

–⁓–

5001	2422 536 00667	1000µF 20% 7032
5002	4822 157 11716	Bead 30Ω at 100MHz
5003	4822 157 11716	Bead 30Ω at 100MHz
5004	4822 157 11716	Bead 30Ω at 100MHz
5005	4822 157 11716	Bead 30Ω at 100MHz
5006	4822 157 11716	Bead 30Ω at 100MHz
5007	4822 157 11716	Bead 30Ω at 100MHz
5008	4822 157 11716	Bead 30Ω at 100MHz
5010	3198 018 64790	47µF 5% 1008
5060	4822 157 11716	Bead 30Ω at 100MHz
5066	3198 018 51080	1µH 10% 0603
5067	3198 018 51080	1µH 10% 0603
5070	4822 157 11716	Bead 30Ω at 100MHz
5071	2422 549 42896	Bead 120Ω 100MHz
5072	2422 549 42896	Bead 120Ω 100MHz

5139	4822 051 20008	Jumper 0805
5251	2422 549 45333	Bead 120Ω 100MHz
5252	2422 549 45333	Bead 120Ω 100MHz
5259	2422 549 45333	Bead 120Ω 100MHz
5262	2422 535 94134	10µH 20% 0805
5267	2422 536 00339	33µ 20%
5268	2422 535 94995	10µF 20% 10145
5304	4822 157 11499	Bead 60Ω at 100MHz
5309	3198 018 31290	12µH 10%
5321	3198 018 33970	0.39µF 10% 0805
5324	4822 157 71334	0.68µH 5% 1008
5370	4822 157 11716	Bead 30Ω at 100MHz
5371	4822 157 11716	Bead 30Ω at 100MHz
5372	4822 157 11716	Bead 30Ω at 100MHz
5530	2422 549 45333	Bead 120Ω 100MHz
5560	4822 157 11716	Bead 30Ω at 100MHz
5580	4822 157 71304	1µH 10% 0805
5605	2422 549 45333	Bead 120Ω 100MHz
5607	2422 549 45333	Bead 120Ω 100MHz
5636	2422 549 45333	Bead 120Ω 100MHz
5680	2422 549 45333	Bead 120Ω 100MHz
5683	2422 549 45333	Bead 120Ω 100MHz
5684	2422 549 45333	Bead 120Ω 100MHz
5685	2422 549 45333	Bead 120Ω 100MHz
5686	2422 549 45333	Bead 120Ω 100MHz
5687	2422 549 45333	Bead 120Ω 100MHz
5720	4822 157 11716	Bead 30Ω at 100MHz
5721	4822 157 11716	Bead 30Ω at 100MHz
5722	4822 157 11716	Bead 30Ω at 100MHz
5872	4822 157 11716	Bead 30Ω at 100MHz
5882	3198 018 51080	1µH 10% 0603
5910	2422 536 00667	1000µF 20% 7032
5920	2422 549 45333	Bead 120Ω 100MHz
5930	2422 535 94134	10µH 20% 0805
5931	2422 536 00689	220µF 20%
5932	2422 535 94134	10µH 20% 0805
5952	2422 535 94134	10µH 20% 0805
5953	2422 536 00689	220µF 20%
5954	2422 535 94134	10µH 20% 0805
5984	2422 549 45333	Bead 120Ω 100MHz
5985	2422 549 45333	Bead 120Ω 100MHz
5986	2422 549 45333	Bead 120Ω 100MHz
5987	2422 549 45333	Bead 120Ω 100MHz
5988	2422 549 45333	Bead 120Ω 100MHz
5989	2422 549 45333	Bead 120Ω 100MHz
5990	2422 549 45333	Bead 120Ω 100MHz
5991	2422 549 45333	Bead 120Ω 100MHz
5994	2422 549 45333	Bead 120Ω 100MHz
5996	2422 549 45333	Bead 120Ω 100MHz
5997	2422 549 45333	Bead 120Ω 100MHz
5998	2422 549 45333	Bead 120Ω 100MHz

6001	4822 130 11397	BAS316
6002	4822 130 11397	BAS316
6005	9340 553 52115	BAS321
6020	4822 130 11397	BAS316
6021	4822 130 11397	BAS316
6075	4822 130 80622	BAT54
6076	4822 130 80622	BAT54
6121	4822 130 11416	PDZ6.8B
6143	4822 130 11416	PDZ6.8B
6259	9322 128 70685	SMSS14
6262	3198 010 10720	SS24
6267	3198 010 10730	SS36
6270	4822 130 10837	UDZS8.2B
6310	4822 130 11397	BAS316
6323	4822 130 11525	1SS356
6328	4822 130 11416	PDZ6.8B
6329	4822 130 11416	PDZ6.8B
6330	4822 130 11416	PDZ6.8B
6331	4822 130 11416	PDZ6.8B
6563	9322 102 64685	UDZ2.7B
6564	4822 130 11416	PDZ6.8B
6565	4822 130 10838	UDZ3.3B
6604	4822 130 11397	BAS316
6605	4822 130 11397	BAS316
6634	9322 102 64685	UDZ2.7B
6635	9322 102 64685	UDZ2.7B
6638	9322 102 64685	UDZ2.7B
6639	9322 102 64685	UDZ2.7B
6693	4822 130 11397	BAS316
6701	3198 020 55680	BZX384-C5V6
6910	5322 130 34337	BAV99
6911	9340 548 71115	PDZ33B
6930	9322 128 70685	SMSS14
6951	9322 128 70685	SMSS14

7001	9339 693 90135	BCP69-25
7002	9340 425 20115	BC847BS
7003	9339 693 90135	BCP69-25
7004	3198 010 42310	BC847BW
7005	9340 547 13215	BSH103
7011		For SW see item 0601
7012	3198 010 42310	BC847BW
7013	3198 010 42310	BC847BW
7014	3198 010 42310	BC847BW
7015	9322 208 05668	SM NE555D
7016	9322 208 05668	SM NE555D
7017	9322 208 05668	SM NE555D
7018	5322 130 60159	BC846B
7019	5322 130 60159	BC846B
7051	3104 317 07511	Softw. (check Prod.Surv.)
7052	3104 317 06722	Softw. (check Prod.Surv.)
7053	3104 317 06742	Softw. (check Prod.Surv.)
7054	3104 317 06691	Softw. (check Prod.Surv.)
7075	4822 130 11155	PDTC114ET
7099		For SW see item 7052
7119	5322 130 60159	BC846B
7138	5322 130 60159	BC846B
7260	9322 139 16668	LF33CPT
7262	9322 202 34668	L5973D
7271	3198 010 42310	BC847BW
7272	3198 010 42310	BC847BW
7320	3198 010 42310	BC847BW
7370	9340 550 49115	PUMH7
7371	9340 550 49115	PUMH7
7372	9340 550 49115	PUMH7
7376	9340 425 10115	BC857BS
7377	9340 425 10115	BC857BS
7401	9322 206 86671	GM1501-BD
7501	9322 199 17671	K4D263238M-QC50
7530		For SW see item 7051
7531		For SW see item 7053
7532	9352 691 71115	NE56610-27GW
7560	9352 334 10118	TDA9178T/N1
7561	3198 010 42310	BC847BW
7562	9322 199 24668	L7808CD2T
7563	4822 209 73852	PMBT2369
7579	4822 130 11155	PDTC114ET
7580	9322 199 16668	M74HC590T
7581	9322 199 16668	M74HC590T
7582	9322 201 05671	CY62256LL-70ZC
7583	9351 870 00118	74HC573PW
7584	9351 870 00118	74HC573PW
7585	3198 010 42310	BC847BW
7604	9352 607 39118	74LVC14APW
7605	4822 209 60792	74HC4053D
7606	9322 199 56668	ADG781BCP
7607	9322 199 80668	SM5301BS-G
7693		For SW see item 7054
7706	9351 742 70118	74HC08PW
7708	9340 425 20115	BC847BS
7710	9340 310 50215	PDTA143ET
7713	3198 010 42310	BC847BW
7714	3198 010 42310	BC847BW
7740	9322 183 05668	TS482ID
7872	9352 686 35118	PCA9515DP
7887	3198 010 42310	BC847BW
7910	4822 130 42804	BC817-25
7920	9322 163 24668	L78M08CDT
7930	5322 209 90529	MC34063AD
7952	5322 209 90529	MC34063AD
7992	9322 142 88668	LF25CDT
7995	9322 189 19668	LD1086D2T18

PDP Audio [C]

Various

1735	2422 025 10768	Connector 3p m
1736	2422 025 10768	Connector 3p m
1739	2422 025 10769	Connector 9p m
1M02	2422 025 11244	Connector 7p m
8302	3104 311 07591	Cable 7P/820/7P

2702	5322 126 11578	1nF 10% 50V 0603
2704	5322 126 11578	1nF 10% 50V 0603
2705	2020 552 96684	470nF 10% 25V 0805
2706	2222 580 15649	100nF 10% 50V 0805
2707	4822 126 14585	100nF 10% 0805 50V
2708	2020 552 96326	220nF 10% 16V
2709	4822 126 13881	470pF 5% 50V
2710	4822 126 13881	470pF 5% 50V
2711	5322 126 11578	1nF 10% 50V 0603
2712	2020 552 96684	470nF 10% 25V 0805
2713	2020 552 96684	470nF 10% 25V 0805
2714	4822 126 14549	33nF 16V 0603
2715	5322 126 11578	1nF 10% 50V 0603
2716	4822 126 14241	330pF 0603 50V
2717	5322 121 42498	680nF 5% 63V
2718	4822 122 33761	22pF 5% 50V
2719	5322 126 11578	1nF 10% 50V 0603
2720	2020 552 96326	220nF 10% 16V
2721	4822 126 13881	470pF 5% 50V
2722	4822 126 13881	470pF 5% 50V
2724	2020 552 96684	470nF 10% 25V 0805
2726	4822 126 14549	33nF 16V 0603
2727	5322 126 11578	1nF 10% 50V 0603
2728	4822 126 14241	330pF 0603 50V
2729	5322 121 42498	680nF 5% 63V
2730	2020 552 96684	470nF 10% 25V 0805
2764	4822 126 14491	2.2µF 10V 0805
2766	4822 126 14491	2.2µF 10V 0805
2768	4822 124 40255	100µF 20% 63V
2769	4822 124 40255	100µF 20% 63V
2777	2020 552 96683	220nF 10% 50V
2778	4822 124 40769	4.7µF 20% 100V
2779	2020 552 96683	220nF 10% 50V
2780	2020 552 96683	220nF 10% 50V
2781	2020 552 96683	220nF 10% 50V
2783	4822 124 81151	22µF 50V
2786	2238 586 15641	22nF 10% 50V 0603
2788	4822 124 40255	100µF 20% 63V
2789	2020 552 96684	470nF 10% 25V 0805
2790	4822 124 40255	100µF 20% 63V

3701	4822 051 30103	10kΩ 5% 0.062W
3702	4822 051 30682	6.8Ω 5% 0.062W
3703	4822 051 30333	33kΩ 5% 0.062W
3704	4822 117 10833	10kΩ 1% 0.1W
3705	4822 051 20828	8.2Ω 5% 0.1W
3706	4822 051 30472	4.7Ω 5% 0.062W
3707	4822 051 30683	68kΩ 5% 0.062W
3708	4822 051 30563	56kΩ 5% 0.062W
3709	4822 117 11503	220Ω 1% 0.1W
3710	4822 051 30223	22kΩ 5% 0.062W
3711	4822 050 21204	120kΩ 1% 0,6W
3712	4822 051 30103	10kΩ 5% 0.062W
3713	4822 116 52207	1.2kΩ 5% 0.5W
3714	4822 117 12925	47kΩ 1% 0.063W 0603
3715	4822 117 12925	47kΩ 1% 0.063W 0603
3716	4822 117 12925	47kΩ 1% 0.063W 0603
3717	4822 116 52234	100kΩ 5% 0.5W
3718	4822 117 13632	100kΩ 1% 0603 0.62W
3721	4822 051 30472	4.7Ω 5% 0.062W
3722	4822 051 30683	68kΩ 5% 0.062W
3723	4822 051 30563	56kΩ 5% 0.062W
3724	4822 117 11503	220Ω 1% 0.1W
3725	4822 051 30223	22kΩ 5% 0.062W
3726	4822 117 11503	220Ω 1% 0.1W
3727	4822 117 11503	220Ω 1% 0.1W
3743	4822 117 11449	2.2kΩ 5% 0.1W 0805
3746	4822 051 30223	22kΩ 5% 0.062W
3747	4822 117 12925	47kΩ 1% 0.063W 0603
3748	4822 116 83883	470Ω 5% 0.5W
3750	4822 117 11449	2.2kΩ 5% 0.1W 0805
3756	4822 117 11449	2.2kΩ 5% 0.1W 0805
3757	4822 117 11449	2.2kΩ 5% 0.1W 0805
3760	4822 117 12891	220kΩ 1%
3761	4822 051 20109	10Ω 5% 0.1W
3762	4822 051 20109	10Ω 5% 0.1W
3763	4822 117 13632	100kΩ 1% 0603 0.62W
3764	4822 051 30222	2.2kΩ 5% 0.062W
3765	4822 051 30222	2.2kΩ 5% 0.062W
3766	4822 117 13632	100kΩ 1% 0603 0.62W
3767	4822 117 13632	100kΩ 1% 0603 0.62W
3768	4822 117 13632	100kΩ 1% 0603 0.62W
3790	4822 051 30272	2.7kΩ 5% 0.062W
3791	4822 051 30272	2.7kΩ 5% 0.062W
3792	4822 051 30103	10kΩ 5% 0.062W
3793	4822 051 30103	10kΩ 5% 0.062W
3798	4822 051 30153	15kΩ 5% 0.062W
3999	4822 051 30101	100Ω 5% 0.062W
9717	4822 051 30008	Jumper 0603

5701	2422 536 00385	68µH 10%
5702	2422 536 00385	68µH 10%
5703	4822 157 11716	Bead 30Ω at 100MHz
5707	4822 157 11411	Bead 80Ω at 100MHz
5708	4822 157 11411	Bead 80Ω at 100MHz
5711	4822 157 11411	Bead 80Ω at 100MHz
5712	4822 157 11411	Bead 80Ω at 100MHz

6701	4822 130 11397	BAS316
6710	4822 130 11551	UDZS10B
6711	4822 130 11551	UDZS10B

7700	9322 163 86682	TDA7490L
7701	3198 010 42310	BC847BW
7703	3198 010 42310	BC847BW
7704	3198 010 42310	BC847BW
7705	3198 010 42310	BC847BW
7706	3198 010 42320	BC857BW
7707	3198 010 42310	BC847BW
7710	3198 010 42310	BC847BW
7711	3198 010 42310	BC847BW
7712	3198 010 42310	BC847BW
7713	3198 010 42310	BC847BW

Side I/O [D]

Various

1001	2422 033 00442	Connector 2P f
1002	2422 026 05587	Sock Cinch 2P f RdWh

2004	4822 126 14241	330pF 0603 50V
2005	2020 552 94427	100pF 5% 50V
2006	4822 126 14241	330pF 0603 50V
2007	2020 552 94427	100pF 5% 50V

3000	4822 051 30759	75Ω 5% 0.062W
3004	4822 051 30759	75Ω 5% 0.062W
3009	4822 051 30102	1kΩ 5% 0.062W
3010	4822 051 30333	33kΩ 5% 0.062W
3012	4822 051 30102	1kΩ 5% 0.062W
3013	4822 051 30333	33kΩ 5% 0.062W
9001	4822 051 30008	Jumper 0603
9002	4822 051 30008	Jumper 0603
9004	4822 051 30008	Jumper 0603
9005	4822 051 30008	Jumper 0603
9007	4822 051 30008	Jumper 0603

6000	4822 130 11416	PDZ6.8B
6001	4822 130 11416	PDZ6.8B
6002	4822 130 11416	PDZ6.8B
6003	4822 130 11416	PDZ6.8B
6004	4822 130 11416	PDZ6.8B
6005	4822 130 11416	PDZ6.8B
6006	4822 130 11416	PDZ6.8B
6007	4822 130 11416	PDZ6.8B

Top Control [E]

Various

0345	4822 267 10459	Connector 3p
1701	2422 128 02778	Tact switch
1702	2422 128 02778	Tact switch
1703	2422 128 02778	Tact switch
1704	2422 128 02778	Tact switch
1705	2422 128 02778	Tact switch
8345	3104 311 06551	Cable 3P/1300/3P

3001	4822 051 20391	390Ω 5% 0.1W
3003	4822 117 13528	200Ω 1% 0.125W 0805
3005	4822 117 11951	2kΩ 1% 0.1W
3009	4822 117 11534	1.1kΩ 1% 0.1W
3011	4822 117 10845	620Ω 1% 0.1W
3999	4822 051 20471	470Ω 5% 0.1W
9001	4822 051 20008	Jumper 0805
9003	4822 051 20008	Jumper 0805
9005	4822 051 20008	Jumper 0805
9006	4822 051 20008	Jumper 0805

EMC Filter [EMC]

Various

1320	2422 025 16545	Connector 10p m
1330	2422 025 16545	Connector 10p m
1345	2422 025 16835	Connector 3p m
1355	2422 025 16835	Connector 3p m

2300	5322 126 11583	10nF 10% 50V 0603
2301	5322 126 11583	10nF 10% 50V 0603
2302	3198 016 31020	1nF 25V 0603
2303	5322 126 11583	10nF 10% 50V 0603
2304	5322 126 11583	10nF 10% 50V 0603
2305	5322 126 11583	10nF 10% 50V 0603
2306	5322 126 11583	10nF 10% 50V 0603
2307	5322 126 11583	10nF 10% 50V 0603
2308	5322 126 11583	10nF 10% 50V 0603

3300	4822 051 30101	100Ω 5% 0.062W
3301	4822 051 30101	100Ω 5% 0.062W
3302	4822 051 30101	100Ω 5% 0.062W
3303	4822 051 30101	100Ω 5% 0.062W
3304	4822 051 30101	100Ω 5% 0.062W
3305	4822 051 30101	100Ω 5% 0.062W
3306	4822 051 30101	100Ω 5% 0.062W
3307	4822 051 30101	100Ω 5% 0.062W

5300	2422 549 43062	Bead 600Ω at 100MHz
5301	2422 549 43062	Bead 600Ω at 100MHz
5302	2422 549 43062	Bead 600Ω at 100MHz
5303	2422 549 43062	Bead 600Ω at 100MHz
5304	2422 549 43062	Bead 600Ω at 100MHz
5305	2422 549 43062	Bead 600Ω at 100MHz
5306	2422 549 43062	Bead 600Ω at 100MHz
5307	2422 549 43062	Bead 600Ω at 100MHz
5308	2422 549 43062	Bead 600Ω at 100MHz
5309	2422 549 43062	Bead 600Ω at 100MHz
5310	2422 549 43062	Bead 600Ω at 100MHz
5311	2422 549 43062	Bead 600Ω at 100MHz
5312	2422 549 43062	Bead 600Ω at 100MHz
5313	2422 549 43062	Bead 600Ω at 100MHz

LED + Switch [J]

Various

0320	2422 025 16545	Connector 10p m
1101	2422 128 03123	Switch 2p 2pos 30V

2107	4822 124 12095	100µF 20% 16V
2120	3198 030 71090	10µF 20% 35V
2126	4822 126 14583	470nF 10% 16V 0805

3101	4822 051 30151	150Ω 5% 0.062W
3103	4822 051 30331	330Ω 5% 0.062W
3105	4822 051 30681	680Ω 5% 0.062W
3106	4822 051 30151	150Ω 5% 0.062W
3107	4822 051 30471	47Ω 5% 0.062W
3108	4822 051 30103	10kΩ 5% 0.062W
3109	4822 051 30101	100Ω 5% 0.062W
3120	4822 051 30472	4.7Ω 5% 0.062W
3121	4822 051 30103	10kΩ 5% 0.062W
3122	4822 051 30332	3.3Ω 5% 0.062W
3123	4822 051 30332	3.3Ω 5% 0.062W
3124	4822 051 30102	1kΩ 5% 0.062W
3126	2322 702 60335	3.3MΩ 5% 0603
3127	2322 702 60335	3.3MΩ 5% 0603
3128	4822 051 30472	4.7Ω 5% 0.062W
4101	4822 051 30008	Jumper 0603
4107	4822 051 30008	Jumper 0603
4108	4822 051 30008	Jumper 0603
4111	4822 051 30008	Jumper 0603

5100	2422 549 43769	Bead 30Ω at 100MHz

6101	4822 130 11564	UDZ3.9B
6103	4822 130 83915	TLMV3100
6105	4822 130 11564	UDZ3.9B
6127	9322 140 63685	TEMD5000

7103	3198 010 42320	BC857BW
7105	3198 010 42320	BC857BW
7107	9322 206 81667	TSOP34836YA1
7120	5322 209 82941	LM358D

11. Revision List

Manual xxxx xxx xxxx.0

- First release.

Manual xxxx xxx xxxx.1

- Second release.
  Block diagrams and schematics updated.
  Description of white tone alignment added.